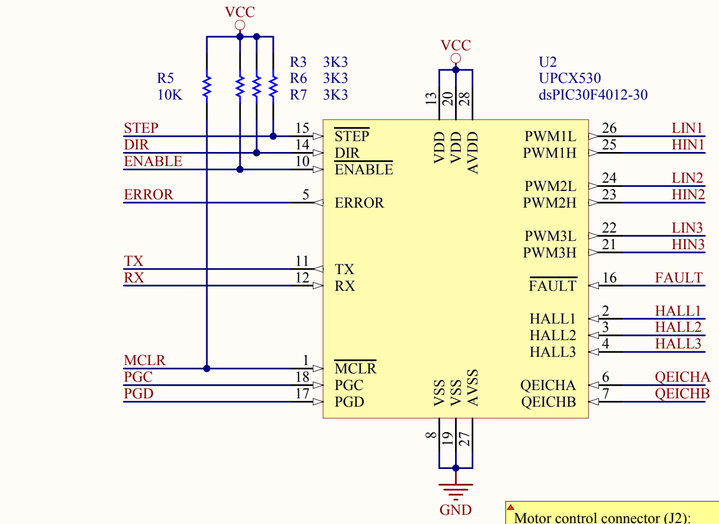

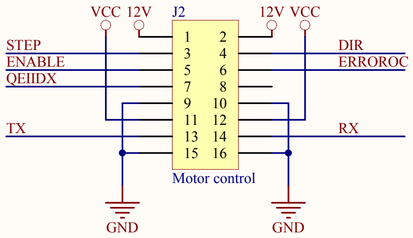

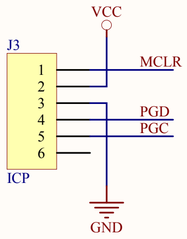

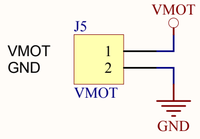

VMOT:
Max: 80V (regulated)
Max 12A / phase for 35µm copper
Max: 16A / phase for 70µm copper

Motor control connector (J2):

PIN1	Power	10V-12V 100mA max see note below
PIN2	Power	10V-12V 100mA max see note below
PIN3	In	Step on H/L transition
PIN4	In	Direction (FWD/REV)
PIN5	In	Enable (act. low)
PIN6	Out OC	Error (act. low) see note below
PIN7	Out	Encoder Index signal
PIN8	NC	
PIN9	Power	GND
PIN10	Power	GND
PIN11	Power	5V 200mA max see note below
PIN12	Power	5V 200mA max see note below
PIN13	Out	RS232 TX (TTL level)
PIN14	Out	RS232 RX (TTL level)
PIN15	Power	GND
PIN16	Power	GND

Notes:
Pin 6 is an open collector output (100mA max) that is low on error. It is also low on controller startup for max. 500ms. Positioning errors can be reset by disabling the device using the enable pin. Internal calculation errors cannot be reset.

User proper and solid grounding techniques. Also connect heatsink to earth ground. Make sure to power 12V and VCC line first before motor power is applied.

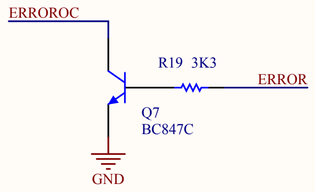

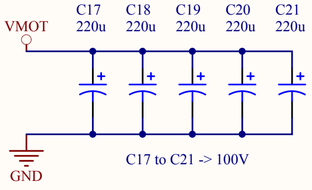

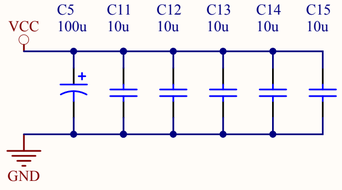

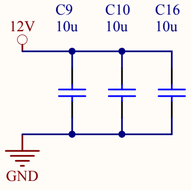

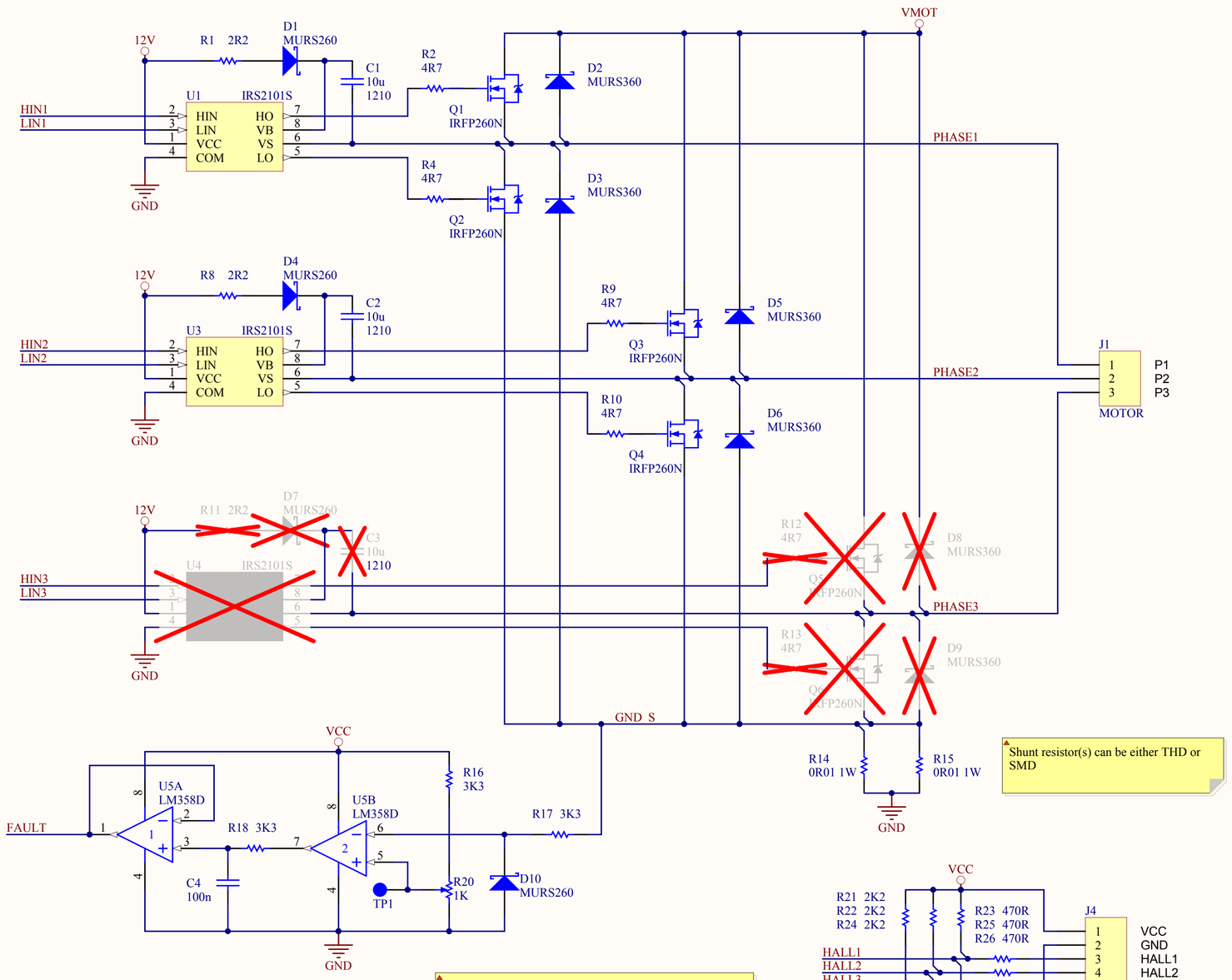

Shunt resistor(s) can be either THD or SMD

Adjusting R20 (overcurrent protection over all 3 phases):

Measure TP1 against ground.
I(max) = V(TP2) / (1/(1/R14+1/R15))

Note on encoders and motors:

Encoders:
Relative A/B signal TTL level encoders. Index pulse is not used by UPCX 530 but can be evaluated by host.

DC-Servomotors:
A DC-Servomotor is detected on power-up of the controller by finding all hall signals high (nothing connected to J4).

BLDC-Servomotors:
BLDC-Servomotors must contain TTL level hall sensors for phase detection. The ratio of "hall phases per revoultion" / "motor pole number" must be 3.
A BLDC-Servomotor is detected on power-up of the controller by finding at least one hall signal low (hall sensors connected to J4).

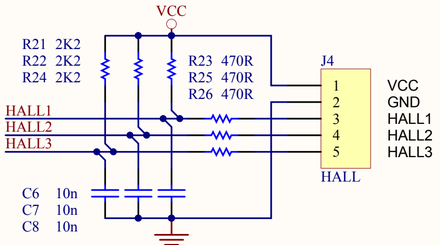

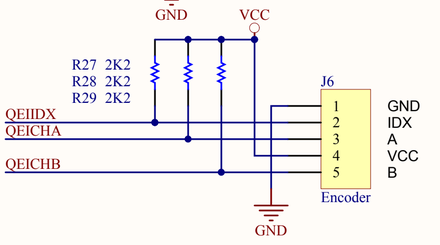

Mechanial parts:

M1	M2	M3	M4
Mounting hole	Mounting hole	Mounting hole	Mounting hole

Title	UPCX530 Power Board	by V. Besmens under CERN 0HL 1.2	www.vbesmens.de
Size: A3	Number		Revision
Date:	10.04.2014	Sheet of	
File:	D:\Users\..\UPCX530P.SchDoc	Drawn By:	

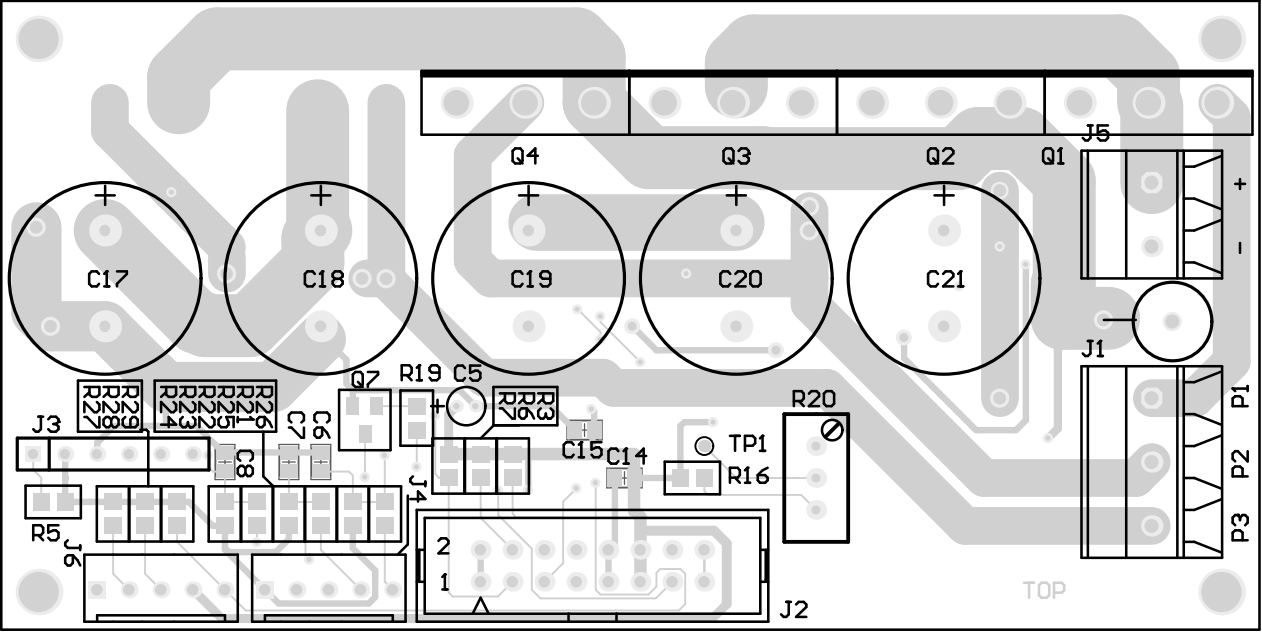

Q4
Q3
Q2
Q1
J5
+
-
C17
C18
C19
C20
C21
J1
P1
P2
P3
R29
R28
R27
R26
R25
R24
R23
R22
R21
R20
R19
C5
Q7
R3
R6
R7
J3
C7
C6
C8
C15
C14
TP1
R16
R5
J6
J4
2
1
J2
TOP

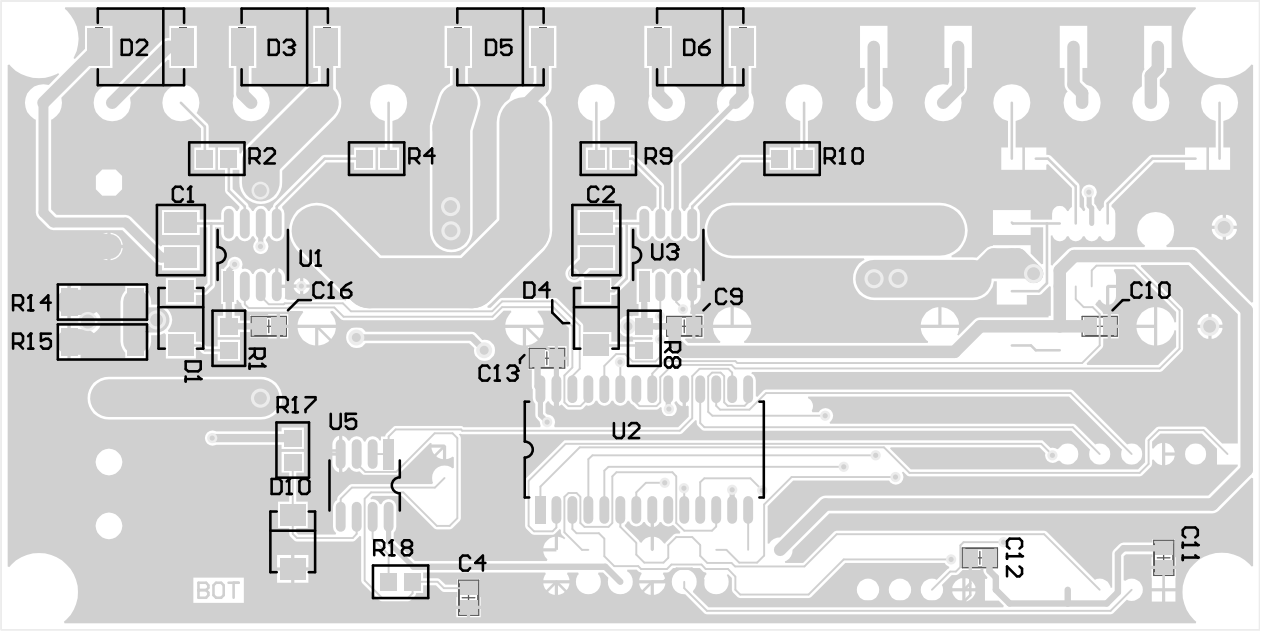
D2
D3
D5
D6
R2
R4
R9
R10
C1
C2
U1
U3
C16
C9
C10
R14
R15
D4
D1
R1
R8
C13
R17
U5
U2
D10
R18
C4
C12
C11
BOT