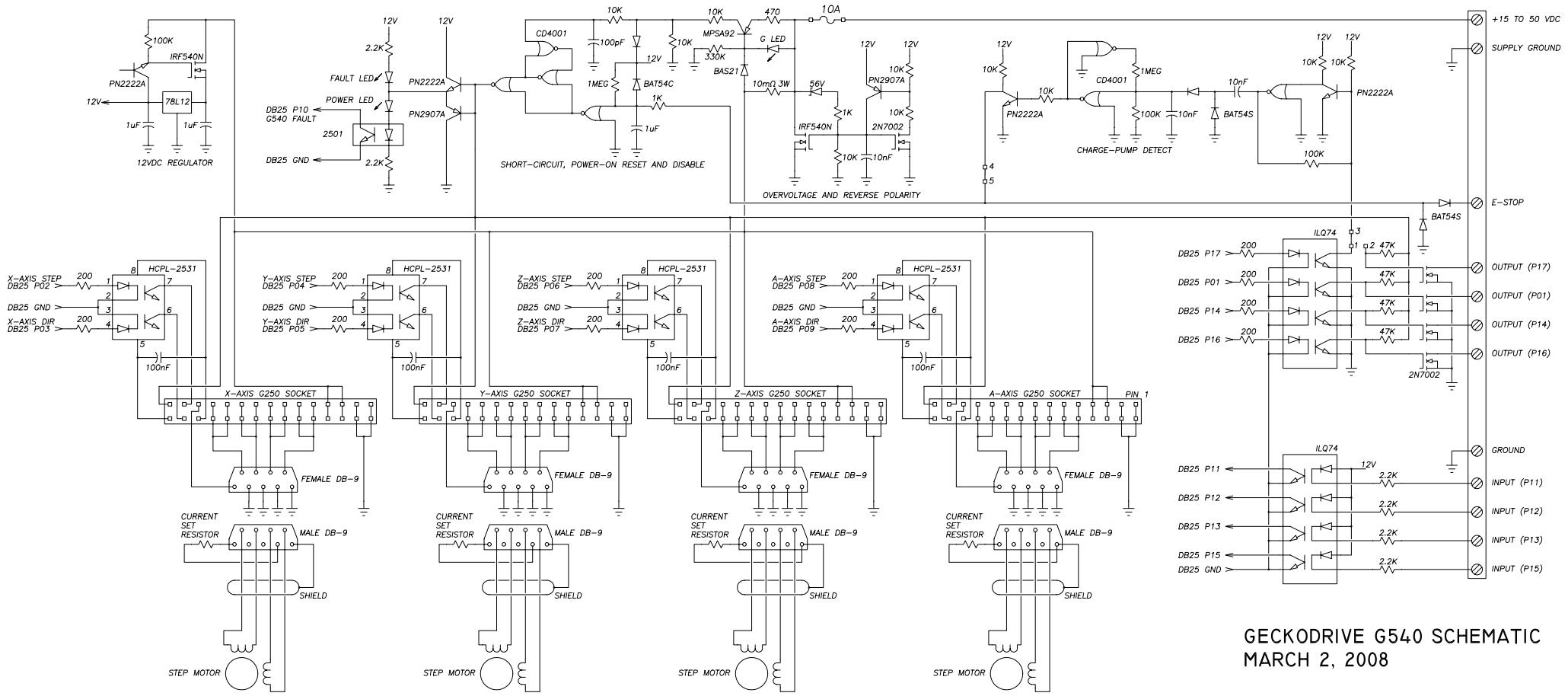

GECKODRIVE G540 SCHEMATIC
MARCH 2, 2008