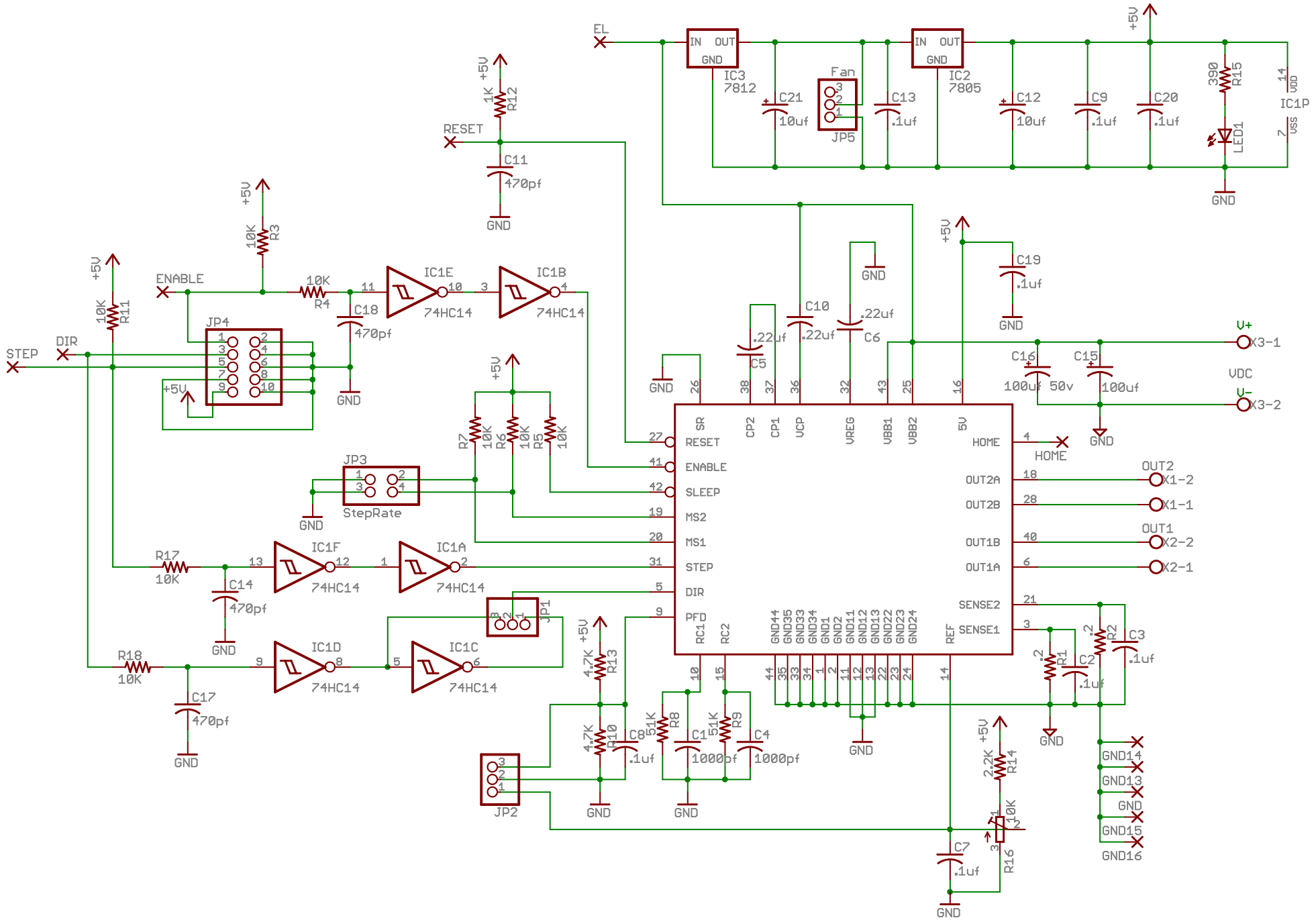
EL
IN OUT
GND
IC3
7812
C21
10uf
Fan
JP5
C13
.1uf
IC2
7805
C12
10uf
C9
.1uf
C20
.1uf
+5V
390
R15
LED1
IC1P
VDD
VSS
GND
RESET
1K
R12
C11
470pf
ENABLE
10K
R3
R4
C18
470pf
IC1E
74HC14
IC1B
74HC14
STEP
DIR
10K
R11
JP4
C19
.1uf
C10
.22uf
C6
.22uf
C5
.22uf
C16
100uf 50v
C15
100uf
V+
X3-1
VDC
V-
X3-2
SR
RESET
ENABLE
SLEEP
MS2
MS1
STEP
DIR
PFD
RC1
RC2
CP2
CP1
VCP
VREG
VBB1
VBB2
5V
HOME
OUT2A
OUT2B
OUT1B
OUT1A
SENSE2
SENSE1
REF
GND44
GND35
GND33
GND34
GND1
GND2
GND11
GND12
GND13
GND22
GND23
GND24
OUT2
X1-2
X1-1
OUT1
X2-2
X2-1
R7
10K
R6
10K
R5
10K
JP3
StepRate
R17
10K
C14
470pf
IC1F
74HC14
IC1A
74HC14
JP1
R18
10K
C17
470pf
IC1D
74HC14
IC1C
74HC14
4.7K
R13
4.7K
R10
C8
.1uf
51K
R8
C1
1000pf
51K
R9
C4
1000pf
JP2
R1
.2
C2
.1uf
R2
.2
C3
.1uf
2.2K
R14
10K
R16
C7
.1uf
GND14
GND13
GND15
GND16