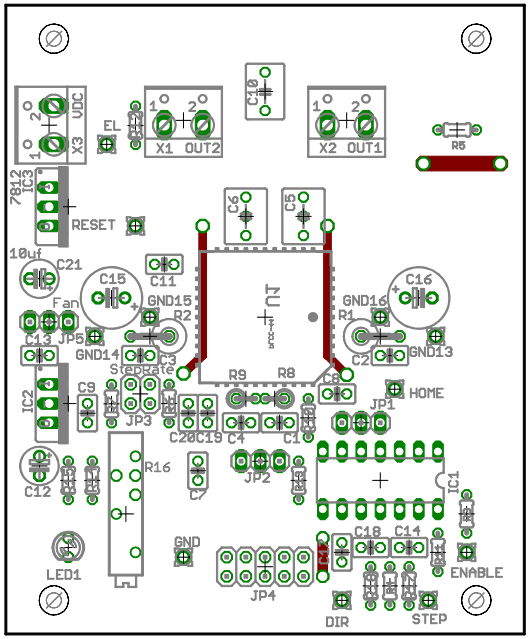
X3
VDC
EL
X1
OUT2
C10
X2
OUT1
R6
7812
IC3
RESET
C6
C5
10uf
C21
C11
C15
GND15
R2
Fan
C13
JP5
GND14
C3
Stepper
C16
GND16
R1
C2
GND13
IC2
C9
JP3
R9
R8
C8
JP1
HOME
C20
C19
C4
C1
C12
R16
C7
JP2
IC1
C18
C14
LED1
GND
JP4
DIR
STEP
ENABLE