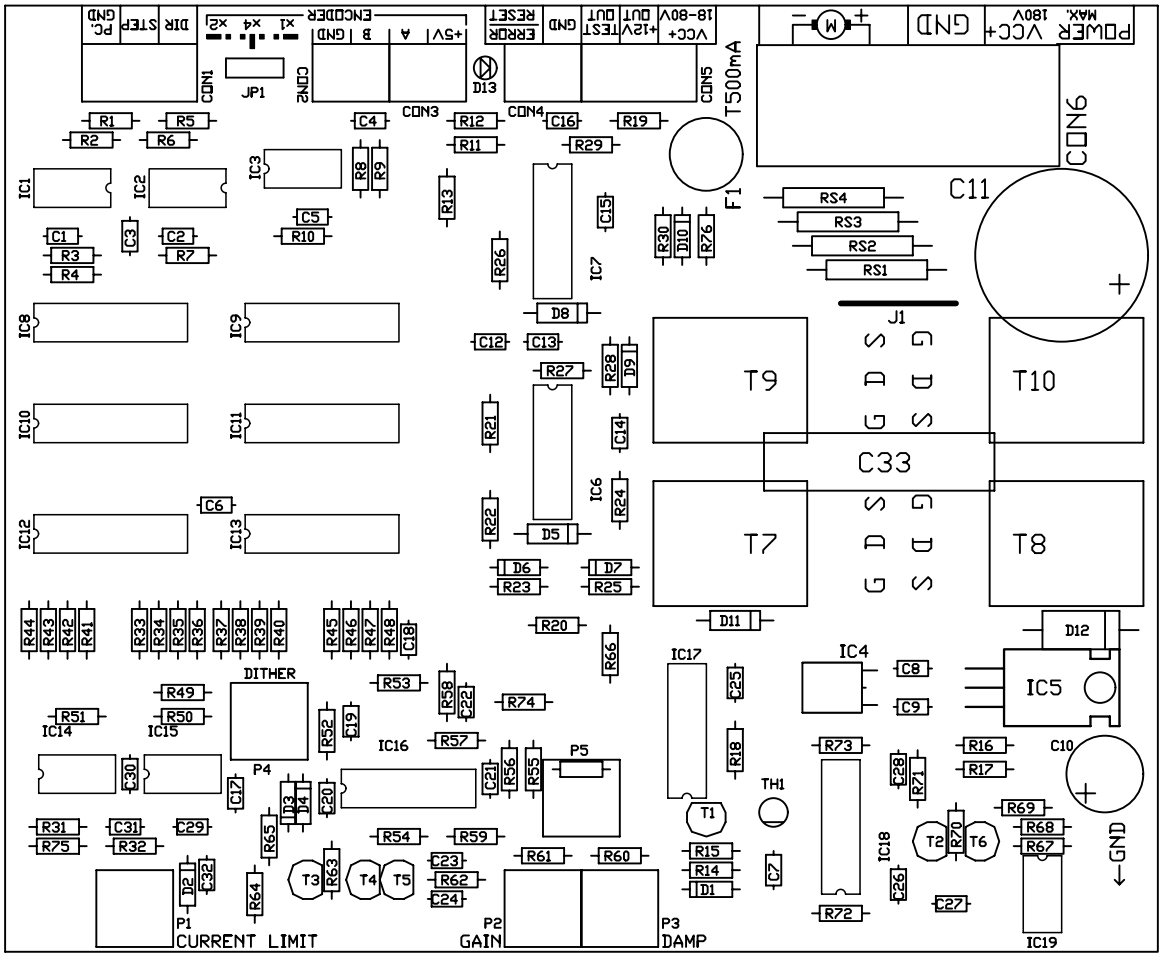
PC. GND
STEP
DIR
CON1
JP1
CON2
ENCODER
x1 x4 x2
GND
B
A
+5V
CON3
D13
ERROR
RESET
GND
CON4
VCC+
+12V
TEST
OUT
18-80V
CON5
T500mA
F1
M
GND
VCC+
POWER
MAX. 180V
CON6
C11
RS4
RS3
RS2
RS1
J1
G D S
G D S
T9
T10
T7
T8
C33
IC1
IC2
IC3
IC6
IC7
IC8
IC9
IC10
IC11
IC12
IC13
IC14
IC15
IC16
IC17
IC18
IC19
IC4
IC5
DITHER
P1
CURRENT LIMIT
P2
GAIN
P3
DAMP
P4
P5
TH1
T1
T2
T3
T4
T5
T6
C10
GND