# SKC STEP MOTOR SST34D SERIES

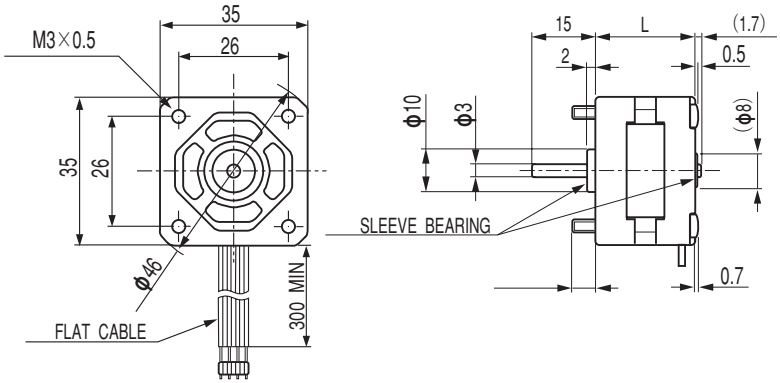


## FREQUENCY VS CURVE

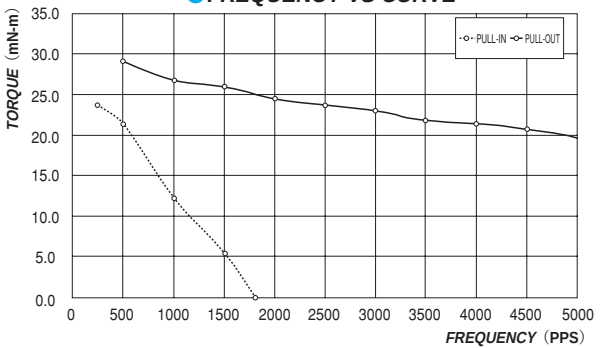


## SPECIFICATION (Tentative)

| MODEL | STEP ANGLE | VOLTAGE | CURRENT | RESISTANCE | INDUCTANCE | HOLDING TORQUE | ROTOR INERTIA | NUMBER OF LEADS | MASS | DEMENSION |
|---|---|---|---|---|---|---|---|---|---|---|
| | ° | V | A/φ | Ω/φ | mH/φ | mN-m | g-cm² | LEAD | kg | L |
| SST34D1XXX | 1.8 | 2.1 | 0.4 | 5.3 ※1 | 6.0 ※2 | 41 ※3 | 7 | 4 | 0.11 | 23.6 |

※1 AT25℃ ※2 1kHz 1Vrms ※3 0.4A/PHASE 2 PHASE EXCITING