FIBROPLAN® NC-Rotary tables

Design: Standard and Vertical

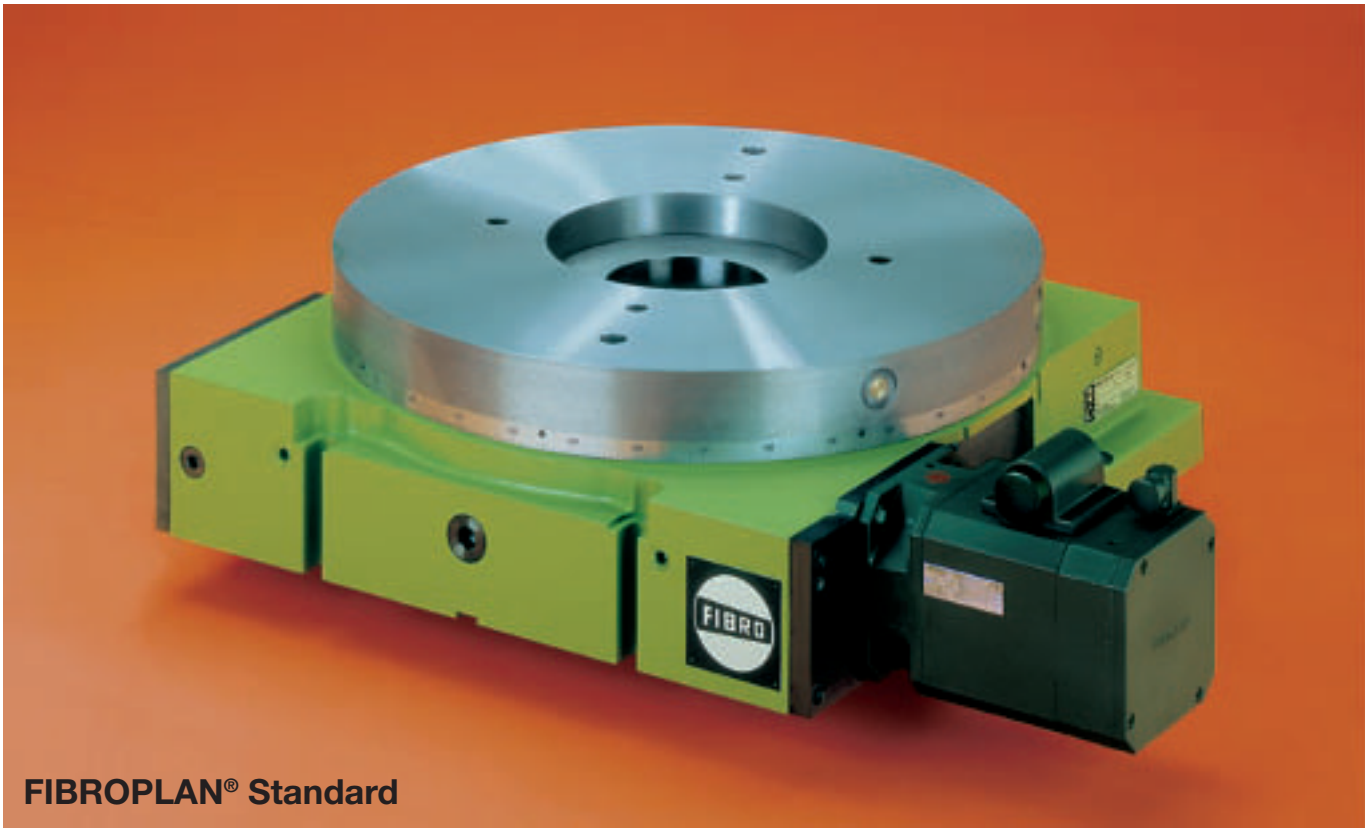

FIBROPLAN® Standard

FIBROPLAN® Vertical

FIBROPLAN®

1-11317-2001-1 ©

11th Edition

This edition makes all previous catalogues invalid. We reserve the right to make further modifications relevant to technical developments.

Index

		Page
FIBROPLAN – Overview –		5
Technical Description		
FIBROPLAN Standard + Vertical		6/7
Measuring System and Motor Arrangements		8
Ordering Code		9
Design Standard · Program summary		11
Technical data and dimensions		
NC-Rotary Table	NC 1.02	12/13
	NC 1.03	14/15
	NC 1.04	16/17
	NC 1.05	18/19
	NC 1.06	20/21
	NC 1.07	22/23
	NC 1.08	24/25
	NC 1.09	26/27
	NC 1.10	28/29
Design Vertical · Program summary		31
Technical data and dimensions		
NC-Rotary Table	NC 2.01	32/33
	NC 2.03	34/35
	NC 2.04	36/37
	NC 2.05	38/39
	NC 2.06	40/41
	NC 2.07	42/43
	NC 2.08	44/45
	NC 2.09	46/47
	NC 2.10	48/49
Technical description		
FIBROPLAN – Combination models with multiple axes		50–53
Accessories		54
Model Definition Chart		55
Formulae		56/57
Determination of moment of inertia		58

1 · 11318 · 2001 ·

FIBROPLAN® – Overview –

The well-graded range of FIBROPLAN NC-Rotary Tables is characterized by the very extensive capabilities of the rotary table movement and angular positioning, both under full CNC-control. FIBROPLAN tables are used on machine tools of diverse type and description, with the control of their rotational axis provided either by an additional control axis of the maschine's CNC, or by a separate CNC-unit for the rotary table itself. FIBROPLAN Rotary Tables are the result of progressive, non-compromising design concepts, aimed at utmost versatility and operational rigidity. These attributes, together with drive – and control elements of outstanding quality, enable the user to achieve –:

- accurate positioning steps of greatest flexibility, through angular displacements of unrestricted magnitude and operational sequence
- safe handling of large machining forces by the stationary table and thereby full utilization of the machine tool's cutting potential
- rotary milling operations with high demands on torque rating, even under conditions of fluctuating push-pull cutting conditions.

The FIBROPLAN manufacturing program offers a wide choice of types, sizes and performance specifications – and therefore an ideal selection for each individual application. The following basic types are available –:

- **FIBROPLAN Standard** – for uses with predominantly vertical table axis (i.e. horizontal table face)
- **FIBROPLAN Vertical** – for uses with horizontal table axis, i.e. chiefly with vertical table face
- **FIBROPLAN Compound** – for applications demanding multipe axis position such as machining of five workpiece faces in one clamping, also for machining tasks with complex three-dimensional geometries.
- FIBROPLAN executions with facilities for pallet clamping are also part of our manufacturing program – as are special designs for complete integration with the carrier machine tool..

- Unrestricted rotary positioning in freely selectable sequence and magnitude.
- Positioning accuracies from plus/minus 3″ (direct measuring system) to plus/minus 10″ (indirect mesuring system) – for the ideal balance between demands and investment.
- High precision in terms of radial and facial runout, due to selected, preloaded radial/axial combination bearings of the largest possible diameter.
- Safe handling of forces imposed by heavy machining and of high torque ratings.
- Optional hydraulic table clamping for even higher machining forces and their elimination as a stress imposed on the gearing system.
- Outstanding potential for rotary milling, on account ot both the adjustable worm gearing and the large-diameter table bearing.
- Reliability and long service life as a result of careful design and exacting craftmanship in assembly.
- Low maintenance demands because of extensively applied long-term lubrication.
- Wide variety of batch-produced standard models – with many variants selectable from a modular supplementary system.
- Multiple-axis executions and special table combinations with linear carrier tables.
- Executions with pallet clamping facilities and workpiece pallets.
- Custom designs for special purposes.

1-11320.2001-1 o

Right of alterations reserved

Technical Description

The basic **NC-Rotary Table FIBROPLAN** consists of the major components table housing, table top, table bearing and drive gear. The main supplementary elements comprise the measuring system, the drive motor, and possibly hydraulic table clamping.

A wide range of optional supplements such as NC-controls and accessories make it possible to expand the installation into a completely NC-controlled axis for rotation and positioning.

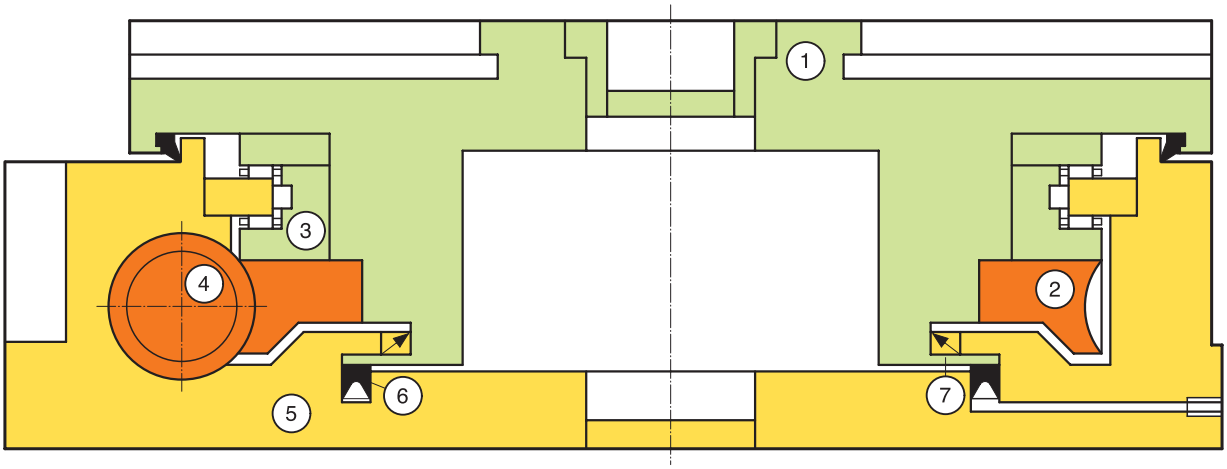

① Table top
② Worm wheel, attached to table top
③ Table bearing
④ Worm shaft, adjustable to minimum play
⑤ Housing
⑥ Annular piston gland – for hydraulic clamping
⑦ Flexible clamping disc

The basic type **FIBROPLAN Standard** is intended chiefly for use with the table axis in the vertical position – that is with a horizontal table face. A compact, low-slung design ensures maximum utilization of the machine tool's working space and utmost rigidity – which is further enhanced by special attention to table stability in the design of all relevant components.

Table sized 2 to 4 of the Standard series have a second mounting face perpendicular to the main one, thereby permitting alternative use with the table face in the vertical position.

FIBROPLAN Vertical – models are meant for use mainly with horizontal table axis – i.e. with the table face in the vertical position. Again the construction is highly compact, with the table axis kept as low as possible. The housing width matches that of the corresponding linear sub-table. Use with the table face in the horizontal position is provided for by the (optional) availability of Tee-slots as the back of the table housing, and in this attitude the permissible mass carried on the table is increased to that of the comparable "Standard" model.

The following descriptions equally apply to both the "Standard" and the "Vertical" models unless otherwise indicated.

1-11321 2001-1 o

Right of alterations reserved

A **preloaded radial/axial combination** bearing of highest precision is used to carry the rotary table. Throughout the range of table sizes, the bearing diameter was kept to the largest possible dimension. Together with the most rigid design of all concerned parts, this feature contributes to the exceptional stability of FIBROPLAN Rotary Tables.

Transmission from the drive motor to the rotary table takes place via a **worm** drive, either in direct power train, or by way of a secondary gear drive unit. The worm drive is distinguished by a worm wheel of the largest possible diameter. This leads to lower contact pressure and a wider meshing arc. Play between the worm and the worm wheel can be adjusted, thereby increasing the positioning accuracy on models with indirect displacement measuring. Moreover, the resulting freedom from backlash benefits rigidity in rotary milling, especially where fluctuating push-pull conditions are encountered. The overdimensioned, careful design layout of the worm drive as well as uncompromising selection of materials ensure lowest wear rates and long service life.

FIBROPLAN tables of size 5 and larger are normally fitted with a secondary **gear drive** unit. In cases where space considerations necessitate a remotely mounted motor, **toothed belt** drives are employed. Secondary gear drive units generally bring the advantage of reducing the drive motor rating.

FIBROPLAN tables can be supplied with pneumatic or hydraulic pressure lines through the central table bore – often required for the actuation ot workpiece power clamping. These arrangements use a rotary union and are available on request.

Models with a clear bore through the table centre are obtainable also (bore diameter as per data sheet). On tables with **direct displacement measuring** the bore diameter is reduced in accordance with the particulars ot the Inductosyn or encoder fitted.

Hydraulic table clamping is available as an optional feature. It offers powerful clamping of the rotary table to the housing and the safe handling of higher tangential machining forces. In the clamped state, the entire worm drive remains free from any transmitted stresses.

As measuring systems for the table top displacement relative to the zero datum position, different versions of incremental rotary resolvers are employed. These vary in respect of constructional type and resolution accuracy. Their final selection depends on the application parameters and on the characteristics of the existing NC-system of the carrier machine tool.

Principally there are two types of measuring systems for rotary tables. The **Direct measuring** System is defined by the direct coupling of the measuring elements to the rotary table; its accuracy depends solely on the resolution rating of the resolver. Other, extraneous fault sources such as errors of the transmission drive are excluded. Direct systems yield the highest degree of accuracy in rotary displacement measuring. **Independent measuring systems** have the resolver coupled to the worm shaft. This arrangement makes lesser demands on resolution accuracy but also introduces gearing errors and backlash into the ultimate result, which therefore is of a lower order. With the adjustable precision worm drives of FIBROPLAN tables it is nevertheless possible to achieve excellent results with indirect systems – often quite adequate for many applications. Specifications on positioning accuracies are given on the technical data sheets.

The measuring system of FIBROPLAN tables is calibrated to a **fixed zero** datum. The turntable can be driven to this reference point by way of a proximity switch which reduces the clockwise rotational motion to a slow approach. The defined response distance of the proximity switch can be seen under “technical data”. Anticlockwise approach of the zero datum position is available by special request.

AC or DC servo-motors are normally used for the table drive. However, other electric or hydraulic motors are possible and can be fitted on request. In most cases, the specific application data will determine make and type of the table drive motor. It is important that only motors without brakes fitted are used to avoid possible damage to the drive (worm and worm wheel) when unprogramed stoppages occur.

A fully sealed motor shaft is required between the motor and the gearbox.

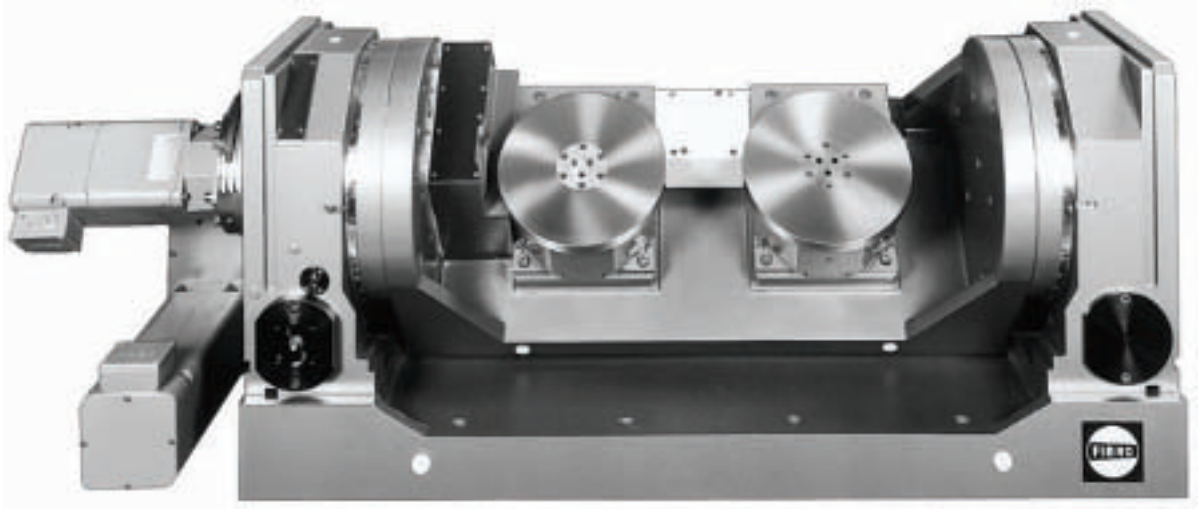

1 · 11322 · 2001 · 1 o

Right of alterations reserved

Displacement Measuring Systems – Arrangements of Resolver etc.

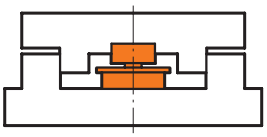

① Direct Measuring System: resolver fitted directly to table top

block 5

FIBROPLAN to be supplied prepared for fitting of measuring system by customer 0

FIBROPLAN to be supplied with measuring system fitted 1

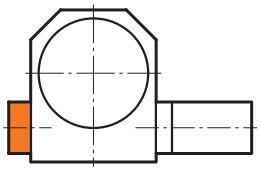

② Indirect Measuring System: resolver fitted to free end of worm shaft

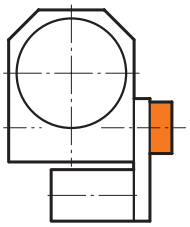

③ Indirect Measuring System: resolver fitted to drive end side of worm shaft (– toothed belt drive from motor)

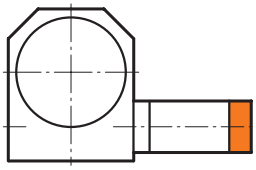

④ Indirect Measuring System: resolver fitted to free end of motor shaft

Motor Arrangements with and without gearing (When ordering please quote the appropriate code in field 6)

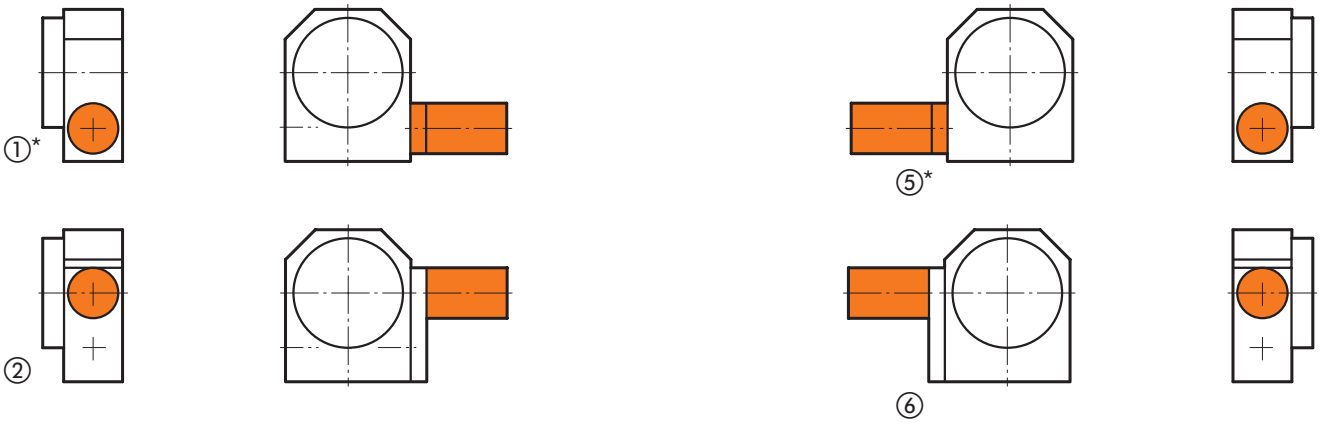

FIBROPLAN Standard ①* depicts normal execution
alternatives available on request

FIBROPLAN Vertical ⑤* depicts normal execution
alternatives available on request

block 6

to be supplied prepared for fitting of customers drive motor 0

to be supplied with drive motor fitted 1

1-11323 2001-1 o

Right of alterations reserved

Diagram of complete CNC-FIBROPLAN Installation

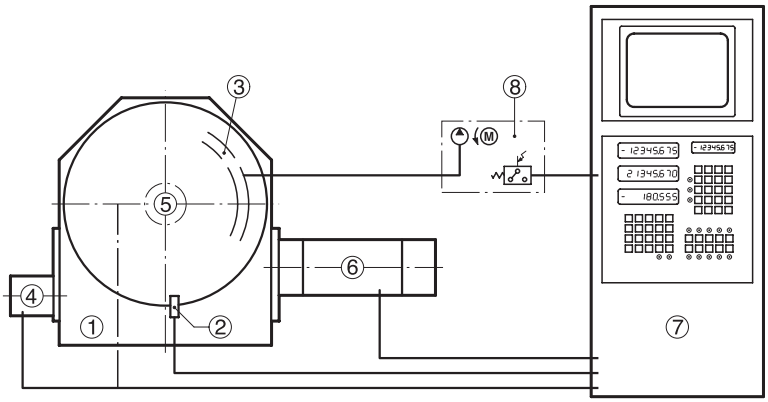

FIBROPLAN
① Rotary Table
② Zero Datum Position Switch

Additional assemblies
③ Hydraulic Table top Clamping
④ Indirect Measuring System
⑤ Direct Measuring System
⑥ Drive Motor

Accessories, Supplementary Equipment
⑦ CNC Control Cabinet
⑧ Hydraulic Power Pack (table clamping)

Composition of ordering code Number
The ordering code number is arranged in blocks. These give a definite description of table model, type, size, optional equipment and accessories.

1. Model:
   basic FIBROPLAN Table as per data sheet

   block 1 N C

   Key

   NC Rotary Table FIBROPLAN
   Type: 1 = Standard, 2 = Vertical
   Size: write “06” for size 6, for instance

2. Table top Dimensions:
   precede mm-dimension with “0” if less than 1000 mm (e.g. “0240”)

   block 2

3. Table top Execution details:
   1 = round, without Tee-slots 2 = round, with Tee-slots
   3 = square, without Tee-slots 4 = square, with Tee-slots
   0 = Table top to customer’s drawings

   block 3

4. Hydraulic Clamping of Table top:
   0 = without
   1 = with hydr. Table clamping system

   block 4

5. Measuring System:

   block 5

   0 = supplied prepared for installation of system by customer
   1 = supplied with measuring system fitted
   – for arrangement of resolvers, see code numbers given on page 8 – (insert in block 5)

6. Drive Motor: (only motors without brakes fitted)

   block 6

   0 = supplied prepared for customer’s motor
   1 = supplied with motor installed
   Motor arrangement: refer to page 8 and insert requisite code number in block 6

7. Accessories/Supplementary Equipment: list separately, giving full description.

Example of completed Ordering Code Number: block 1 N C 1 . 0 6 . 2 0 6 3 0 . 3 4 . 4 1 . 5 1 2 . 6 0 5

– We shall be pleased to process incoming orders NOT encoded in accordance with our ordering code system –

1-11324-2001-1 ◦

Right of alterations reserved

FIBROPLAN®
Special execution

1-11325-2001-1 o

Right of alterations reserved

Program
FIBROPLAN® Standard

Model		Standard								
		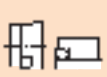	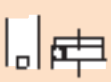	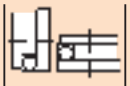				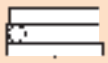	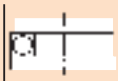	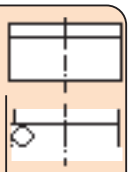
		NC 1.02	NC 1.03	NC 1.04	NC 1.05	NC 1.06	NC 1.07	NC 1.08	NC 1.09	NC 1.10
Specifications on	Page	12/13	14/15	16/17	18/19	20/21	22/23	24/25	26/27	28/29
General Dimensions										
table top dimensions (∅ or □)	mm	240/280	340/400	420/500	520/630	630/800	800/1000	1000/1250	1250/1500	1600
centre height table top	mm	180	245	280	–	–	–	–	–	–
height table top face above base	mm	190	190	210	205	225	250	290	330	365
bearing dims. (I.D.x O.D.)	mm	120×210	200×300	260×385	325×450	395×525	460×600	650×870	850×1095	1030×1300
Capacities (maximum (values)										
thrust against table top face: a) table top face horizontal	N	25 000	35 000	40 000	55 000	75 000	100 000	180 000	240 000	350 000
b) table top face vertical	N	9 000	9 000	10 000	–	–	–	–	–	–
table top loading (workpieces + fixtures): a) table top face horizontal	kg	800	1 000	1 200	2 500	3 500	6 000	10 000	12 000	20 000
b) table top face vertical	kg	250	300	400	–	–	–	–	–	–
tilting moments: a) table top face horizontal	Nm	3 200	5 000	8 000	16 000	20 000	26 000	60 000	80 000	150 000
b) table top face vertical (incl. moment of workpieces + fixtures)	Nm	2 000	2 000	3 200	–	–	–	–	–	–
torque exerted in rotary milling	Nm	850	1 900	3 500	4 200	7 000	7 000	14 000	17 000	24 000
tangential torque, exerted against table top locked hydraulically	Nm	1 200	2 000	4 000	6 000	8 000	14 000	25 000	32 000	40 000
Accuracies										
positioning accuracy: a) with Direct Measuring System″		± 15	± 15	± 10	± 10	± 10	± 10	± 10	± 10	± 10
b) with Direct Measuring System″ (dependent on resolver type)		± 3	± 3	± 3	± 3	± 3	± 3	± 3	± 3	± 3
runout: central bore table top (TIR)	mm	0,01	0,01	0,01	0,01	0,01	0,01	0,01	0,01	0,01
runout: table top face (TIR)	mm	0,01	0,01	0,01	0,012	0,015	0,015	0,02	0,02	0,025
Gear Ratios/ Table top Speeds										
total drive ratio motor table top	i total	72/144	120/240	120/240	240	288	360	480	480	480
table top rotational speed (max.)	min^{-1}	27,5	12,5	10	10	8	6	6	4,2	3,1

1-11326-2001-1 o

Right of alterations reserved

NC 1.02 Technical Data

1. Type designation

Field 1: N C 1. 0 2 .

FIBROPLAN NC1.

Size 02.

2. Table top

Field 2

dimension	∅ □ 240 mm	0240	
	∅ □ 280 mm	0280	
execution	○ round without T-slots	1	
	⊕ round with T-slots	2	
	□ square without T-slots	3	
	⊞ square with T-slots	4	

Field 3

3. Locking, of rotary table spindle

Field 4

without hydraulic table clamping	0
with hydraulic table clamping	1

4. Measuring system

Field 5

see page 8

5. Drive motor arrangement

Field 6

see page 8

7. Accuracies

Positioning accuracies:		
a) with Indirect Measuring System		
in seconds of arc	∢ s	± 15″ (± 10 on request)
indicator reading at ∅ 240	mm	± 0,009 TIR
b) with Direct Measuring System		
in seconds of arc	∢ s	± 3″
indicator reading at ∅ 240	mm	± 0,0017
Runout: centre bore		
in the rotary table	mm	0,01
Runout: table top face		
(relative to ∅ 240)	mm	0,01
Parallelism: table top face to mounting face		
(relative to ∅ 240)	mm	0,02
Squareness: table top face to mounting face		
(relative to ∅ 240)	mm	0,02

Higher geometrical precision on request

6. Technical data

Optional centre bore – max. ∅	mm	65
Table top bearing ID × OD	mm	120 × 210
Diameter of worm wheel	mm	182
Ratio:		
Worm drive ratio	i =	72
Total drive ratio, with secondary drive (see page 6)	i_{tot} =	144
Table top speed (max.)	$n_{max.}$ =	27,5 min^{-1}
Hydraulic table clamping:		
system pressure rating	bar	64
consumption	cm^3	4
pump delivery rating	l/min	max. 2
Any mounting attitude of FIBROPLAN		
Weight of FIBROPLAN (table top ∅ 240, without drive motor)	kg	approx. 80

8. Sequence of motions

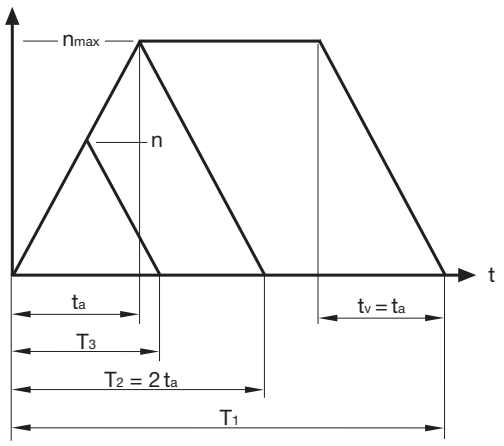

9. Switching times/moments of inertia (switching times rounded up/down)

excluding clamping process and excluding reaction times

Turning angle at table	ρ	°	10				30				45			
r.p.m. at table		min^{-1}	27,50	27,50	27,50	27,50	27,50	27,50	27,50	27,50	27,50	27,50	27,50	27,50
Moment of inertia from transport load	J	kgm^2	8	12	16	20	8	12	16	20	8	12	16	20
Angular acceleration at table	α	s^{-2}	14,40	10,50	7,85	6,30	14,40	10,50	7,85	6,30	14,40	10,50	7,85	6,30
Positioning time	T	s	0,25	0,25	0,30	0,35	0,40	0,45	0,55	0,60	0,50	0,55	0,65	0,70
Acceleration/deceleration time per	t_a, t_v	s	0,20	0,30	0,40	0,45	0,20	0,30	0,40	0,45	0,20	0,30	0,40	0,45

Turning angle at table	ρ	°	60				90				180			
r.p.m. at table		min^{-1}	27,50	27,50	27,50	27,50	27,50	27,50	27,50	27,50	27,50	27,50	27,50	27,50
Moment of inertia from transport load	J	kgm^2	8	12	16	20	8	12	16	20	8	12	16	20
Angular acceleration at table	α	s^{-2}	14,40	10,50	7,85	6,30	14,40	10,50	7,85	6,30	14,40	10,50	7,85	6,30
Positioning time	T	s	0,55	0,65	0,75	0,85	0,75	0,85	0,90	1,00	1,30	1,40	1,45	1,55
Acceleration/deceleration time per	t_a, t_v	s	0,20	0,30	0,40	0,45	0,20	0,30	0,40	0,45	0,20	0,30	0,40	0,45

1-11327 2001-1 ◦

Ordering inform. with code no. Field 1: N C 1. 0 2 . [ ] [ ] . [ ] . [ ] . [ ] . [ ]

Right of alterations reserved

10. Load data

Thrust against table top face:				
a) table top horizontal (load + machining forces)		N	25 000	①
b) table top vertical		N	9 000	②
Radial thrust against table top		N	25 000	③
Table top loads (workpieces + fixtures):				
a) table top horizontal		kg	800	④
b) table top vertical		kg	250	⑤
Mass moment of inertia of load (workpieces + fixtures), s. 9.		kgm^2	20	
Tilting moments:				
a) table top horizontal		Nm	3 200	⑥
b) table top vertical –				
incl. moment exerted by workpieces + fixtures		Nm	2 000	⑦
Tangential moment against table top				
(with hydr. table clamping activated)		Nm	1 200	⑧
Torque limit		Nm	850	⑨
transferable by worm drive				
Maximum permissible motor torque	when $i_{tot.}$ = 72	Nm	40	
	when $i_{tot.}$ = 144	Nm	20	
Motor torque requirement for	when $i_{tot.}$ = 72	Nm	8	
positioning only	when $i_{tot.}$ = 144	Nm	4	

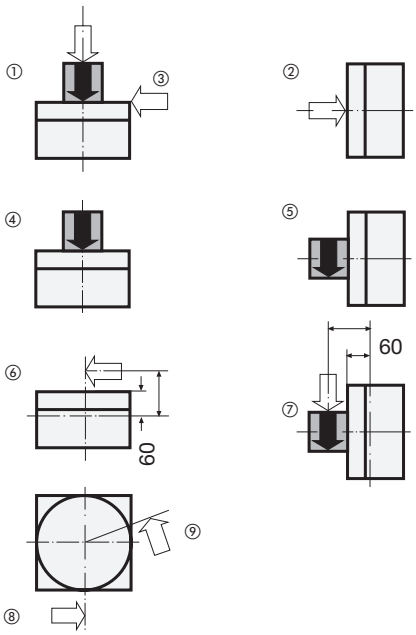

11. Installed dimensions Drawings of DXF files available to order.

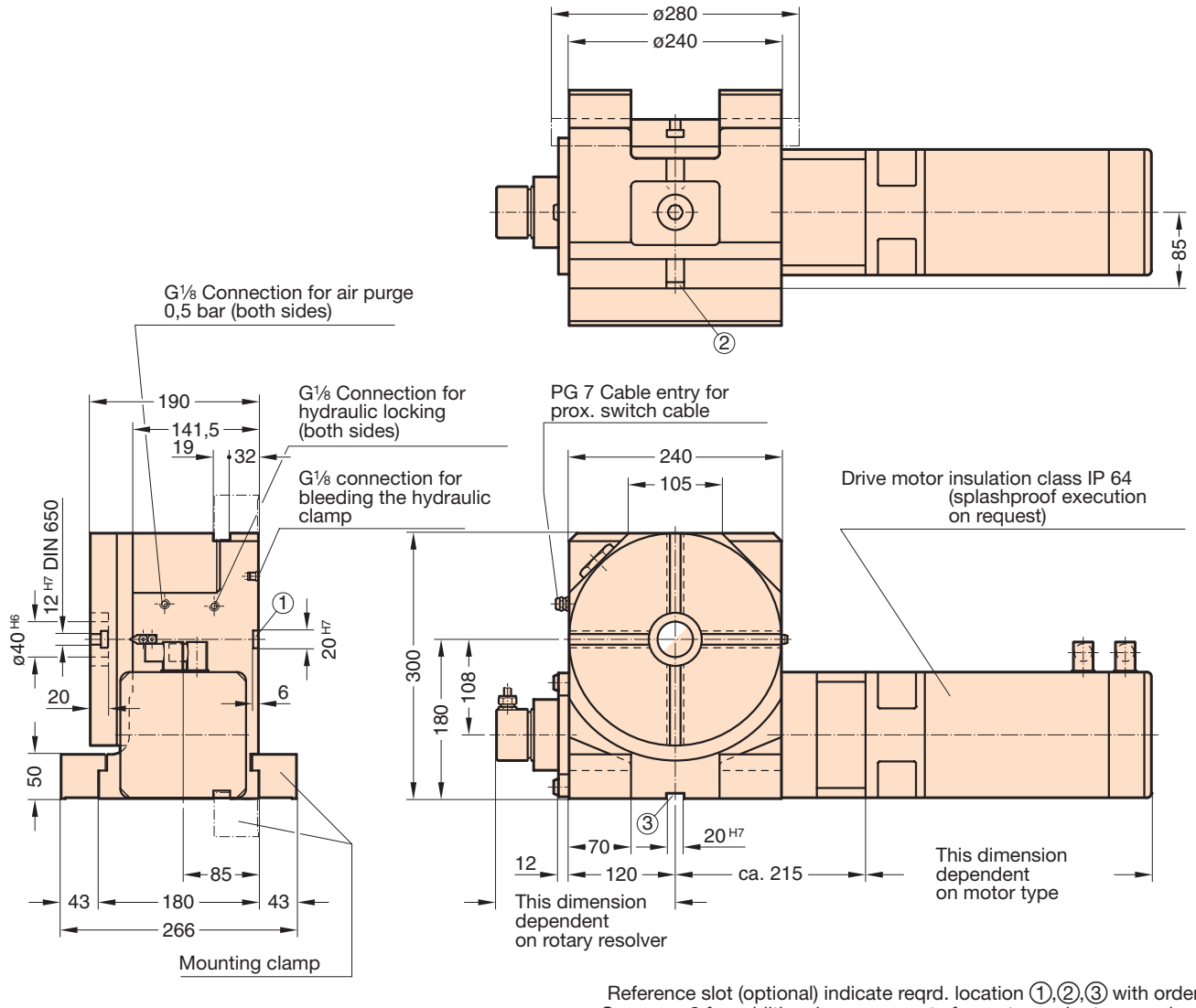

Reference slot (optional) indicate reqrd. location ①,②,③ with order
See page 8 for additional arrangements for motor and rotary resolver

1 - 11328 .2001- 1 ◦

Right of alterations reserved

NC 1.03 Technical Data

1. Type designation

Field 1 NC1.03.

FIBROPLAN	NC1.
Size	03.

2. Table top

Field 2 ☐.

dimension	∅ ☐ 340		mm	0340
	∅ ☐ 400		mm	0400
execution	○ round	without T-slots		1
	⊕ round	with T-slots		2
	☐ square	without T-slots		3
	⊞ square	with T-slots		4

Field 3 ☐.

3. Locking, of rotary table spindle

Field 4 ☐.

without hydraulic table clamping	0
with hydraulic table clamping	1

4. Measuring system

Field 5 ☐.

see page 8

5. Drive motor arrangement

Field 6 ☐

see page 8

7. Accuracies

Positioning accuracies:		
a) with Indirect Measuring System		
in seconds of arc	∢ s	± 15 (± 10 on request)
indicator reading at ∅ 340	mm	± 0,012
b) with Direct Measuring System		
in seconds of arc	∢ s	± 3
indicator reading at ∅ 340	mm	± 0,0025
Runout: centre bore in the rotary table	mm	0,01
Runout: table top face (relative to ∅ 340)	mm	0,01
Parallelism: table top face to mounting face (relative to ∅ 340)	mm	0,02
Squareness: table top face to mounting face (relative to ∅ 340)	mm	0,02
Higher geometrical precision on request		

6. Technical Data

Optional centre bore – max. ∅	mm	110
Table top bearing ID × OD	mm	200 × 300
Diameter of worm wheel	mm	275
Ratio:		
Worm drive ratio	i =	120
Total drive ratio, with secondary drive (see page 6)	i_{tot} =	240
Table top speed (max.)	$n_{max.}$ =	12,5
Hydraulic table clamping:		
system pressure rating	bar	64
consumption	cm^3	4
pump delivery rating	l/min	max. 2
Any mounting attitude of FIBROPLAN		
Weight of FIBROPLAN (table top ∅ 340, without drive motor)	kg	approx. 170

8. Sequence of motions

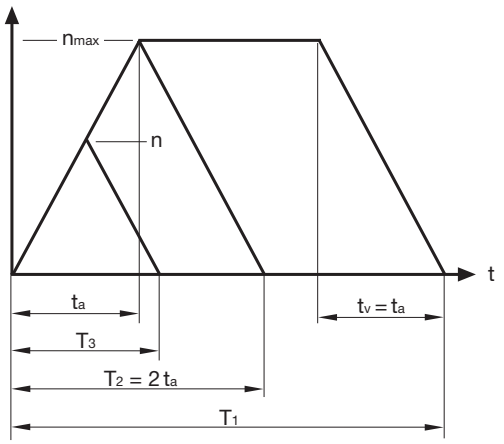

9. Switching times/moments of inertia (switching times rounded up/down)

excluding clamping process and excluding reaction times

Turning angle at table	ρ	°	10				30				45			
r.p.m. at table		min^{-1}	12,50	12,50	12,50	12,50	12,50	12,50	12,50	12,50	12,50	12,50	12,50	12,50
Moment of inertia from transport load	J	kgm^2	45	55	70	90	45	55	70	90	45	55	70	90
Angular acceleration at table	α	s^{-2}	6,55	5,25	4,20	3,15	6,55	5,25	4,20	3,15	6,55	5,25	4,20	3,15
Positioning time	T	s	0,35	0,35	0,40	0,50	0,60	0,65	0,70	0,85	0,80	0,85	0,90	1,05
Acceleration/deceleration time per	t_a, t_v	s	0,20	0,25	0,30	0,45	0,20	0,25	0,30	0,45	0,20	0,25	0,30	0,45

Turning angle at table	ρ	°	60				90				180			
r.p.m. at table		min^{-1}	12,50	12,50	12,50	12,50	12,50	12,50	12,50	12,50	12,50	12,50	12,50	12,50
Moment of inertia from transport load	J	kgm^2	45	55	70	90	45	55	70	90	45	55	70	90
Angular acceleration at table	α	s^{-2}	6,55	5,25	4,20	3,15	6,55	5,25	4,20	3,15	6,55	5,25	4,20	3,15
Positioning time	T	s	1,00	1,05	1,10	1,25	1,40	1,45	1,50	1,65	2,60	2,65	2,70	2,85
Acceleration/deceleration time per	t_a, t_v	s	0,20	0,25	0,30	0,45	0,20	0,25	0,30	0,45	0,20	0,25	0,30	0,45

1 · 11329 · 2001 · 1 ◦

Ordering inform. with code no. NC1.03 . ☐ . ☐ . ☐ . ☐ . ☐

Field 1 2 3 4 5 6

Right of alterations reserved

10. Load data

Thrust against table top face:				
a) table top horizontal (load + machining forces)		N	35 000	①
b) table top vertical		N	9 000	②
Radial thrust against table top		N	40 000	③
Table top loads (workpieces + fixtures):				
a) table top horizontal		kg	1 000	④
b) table top vertical –		kg	300	⑤
Mass moment of inertia of load (workpieces + fixtures), s. 9.		kgm²	90	
Tilting moments:				
a) table top horizontal		Nm	5 000	⑥
b) table top vertical – incl. moment exerted by workpieces + fixtures		Nm	2 000	⑦
Tangential moment against table top (with hydr. table clamping activated)		Nm	2 000	⑧
Torque limit during rotary milling transferable by worm drive		Nm	1 900	⑨
Maximum permissible motor torque	when $i_{tot.}$ = 120	Nm	58	
	when $i_{tot.}$ = 240	Nm	29	
Motor torque requirement for positioning only	when $i_{tot.}$ = 120	Nm	14	
	when $i_{tot.}$ = 240	Nm	7	

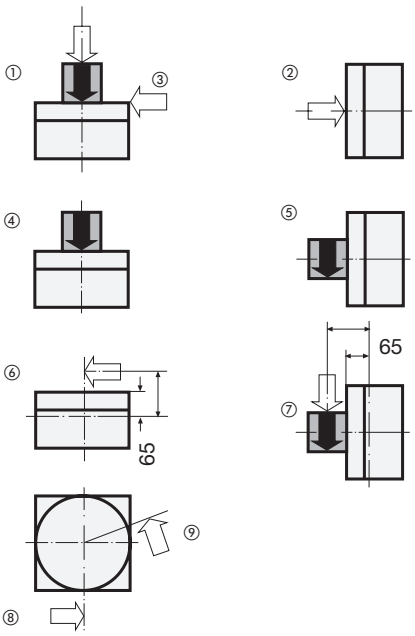

11. Installed dimensions Drawings of DXF files available to order.

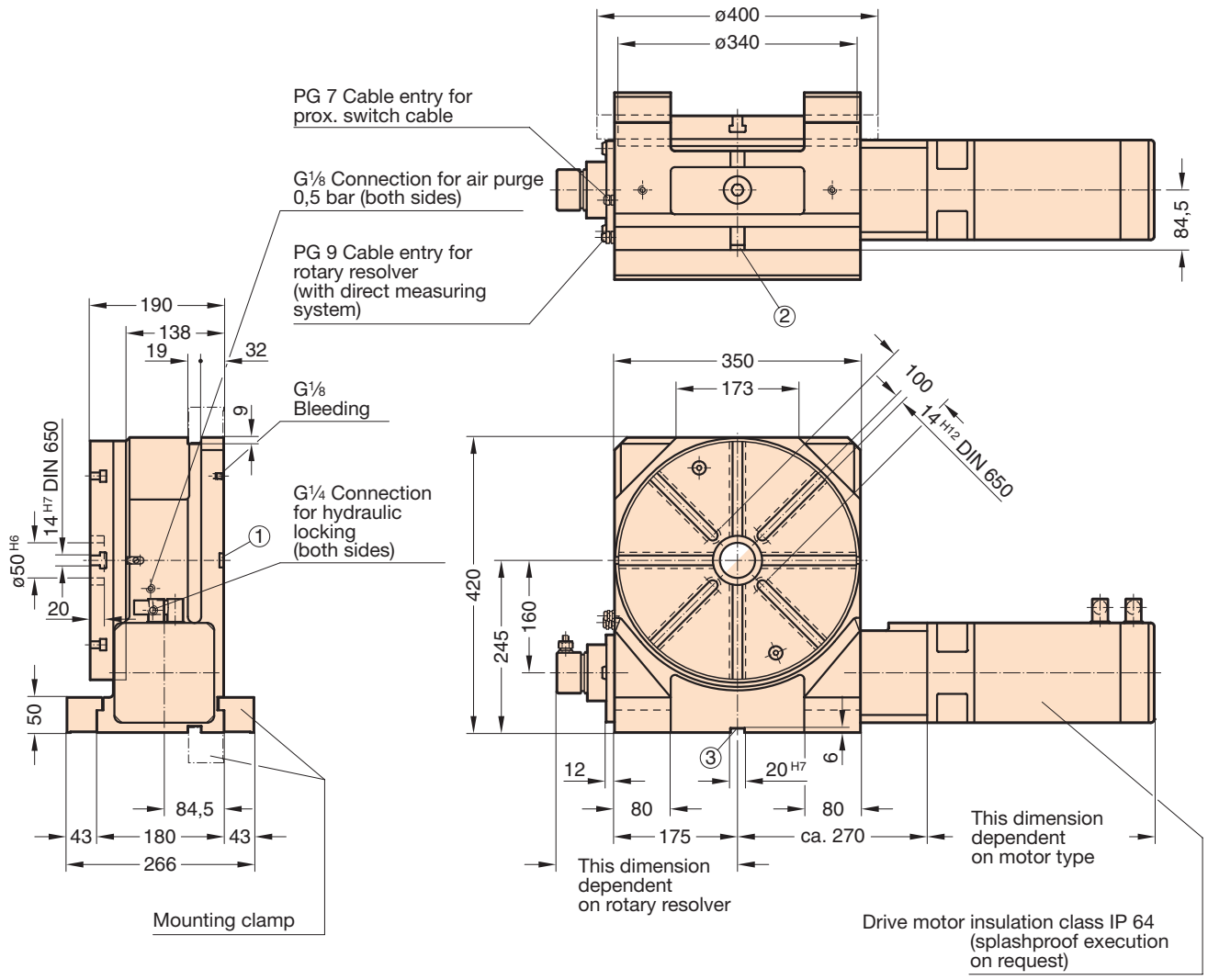

See page 8 for additional arrangements for motor and rotary resolver

Reference slot (optional) indicate reqrd. location ①,②,③ with order

1 · 11330 · 2001 · 1 ◦

Right of alterations reserved

NC 1.04 Technical Data

1. Type designation

Field 1: N C 1. 0 4 .

FIBROPLAN NC1.

Size 04.

2. Table top

Field 2

dimension	∅ □ 420 mm	0420	
	∅ □ 500 mm	0500	
execution	○ round without T-slots	1	
	⊕ round with T-slots	2	
	□ square without T-slots	3	
	⊞ square with T-slots	4	

Field 3

3. Locking, of rotary table spindle

Field 4

without hydraulic table clamping	0
with hydraulic table clamping	1

4. Measuring system

Field 5

see page 8

5. Drive motor arrangement

Field 6

see page 8

7. Accuracies

Positioning accuracies:		
a) with Indirect Measuring System		
in seconds of arc	∢ s	± 10
indicator reading at ∅ 420	mm	± 0,010
b) with Direct Measuring System		
in seconds of arc	∢ s	± 3
indicator reading at ∅ 420	mm	± 0,003
Runout: centre bore		
in the rotary table	mm	0,01
Runout: table top face		
(relative to ∅ 420)	mm	0,01
Parallelism: table top face to mounting face		
(relative to ∅ 420)	mm	0,02
Squareness: table top face to mounting face		
(relative to ∅ 420)	mm	0,02

Higher geometrical precision on request

6. Technical Data

Optional centre bore – max. ∅	mm	140
Table top bearing ID × OD	mm	260 × 385
Diameter of worm wheel	mm	347
Ratio:		
Worm drive ratio	i =	120
Total drive ratio, with secondary drive (see page 6)	i_{tot} =	240
Table top speed (max.)	$n_{max.}$ =	10
Hydraulic table clamping:		
system pressure rating	bar	64
consumption	cm^3	6
pump delivery rating	l/min	max. 3
Any mounting attitude of FIBROPLAN		
Weight of FIBROPLAN (table top ∅ 420, without drive motor)	kg	approx. 270

8. Sequence of motions

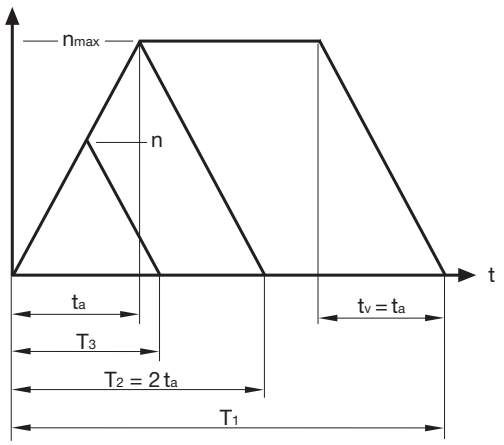

9. Switching times/moments of inertia (switching times rounded up/down)

excluding clamping process and excluding reaction times

Turning angle at table	ρ	°	10				30				45			
r.p.m. at table		min^{-1}	10,00	10,00	10,00	10,00	10,00	10,00	10,00	10,00	10,00	10,00	10,00	10,00
Moment of inertia from transport load	J	kgm^2	75	95	125	190	75	95	125	190	75	95	125	190
Angular acceleration at table	α	s^{-2}	5,25	4,20	3,15	2,10	5,25	4,20	3,15	2,10	5,25	4,20	3,15	2,10
Positioning time	T	s	0,40	0,40	0,50	0,60	0,70	0,75	0,85	1,00	0,95	1,00	1,10	1,25
Acceleration/deceleration time per	t_a, t_v	s	0,20	0,25	0,35	0,50	0,20	0,25	0,35	0,50	0,20	0,25	0,35	0,50

Turning angle at table	ρ	°	60				90				180			
r.p.m. at table		min^{-1}	10,00	10,00	10,00	10,00	10,00	10,00	10,00	10,00	10,00	10,00	10,00	10,00
Moment of inertia from transport load	J	kgm^2	75	95	125	190	75	95	125	190	75	95	125	190
Angular acceleration at table	α	s^{-2}	5,25	4,20	3,15	2,10	5,25	4,20	3,15	2,10	5,25	4,20	3,15	2,10
Positioning time	T	s	1,20	1,25	1,35	1,50	1,70	1,75	1,85	2,00	3,20	3,25	3,35	3,50
Acceleration/deceleration time per	t_a, t_v	s	0,20	0,25	0,35	0,50	0,20	0,25	0,35	0,50	0,20	0,25	0,35	0,50

1-11331 2001-1 ◦

Ordering inform. with code no. Field 1: N C 1. 0 4 . [ ] . [ ] . [ ] . [ ] . [ ]

Right of alterations reserved

10. Load data

Thrust against table top face:				
a) table top horizontal (load + machining forces)		N	40 000	①
b) table top vertical		N	10 000	②
Radial thrust against table top		N	50 000	③
Table top loads (workpieces + fixtures):				
a) table top horizontal		kg	1 200	④
b) table top vertical –		kg	400	⑤
Mass moment of inertia of load (workpieces + fixtures), s. 9.		kgm^2	190	
Tilting moments:				
a) table top horizontal		Nm	8 000	⑥
b) table top vertical –				
incl. moment exerted by workpieces + fixtures		Nm	3 200	⑦
Tangential moment against table top		Nm	4 000	⑧
(with hydr. table clamping activated)				
Torque limit during rotary milling		Nm	3 500	⑨
transferable by worm drive				
Maximum permissible motor torque	when $i_{tot.}$ = 120	Nm	96	
	when $i_{tot.}$ = 240	Nm	48	
Motor torque requirement for	when $i_{tot.}$ = 120	Nm	16	
positioning only	when $i_{tot.}$ = 240	Nm	8	

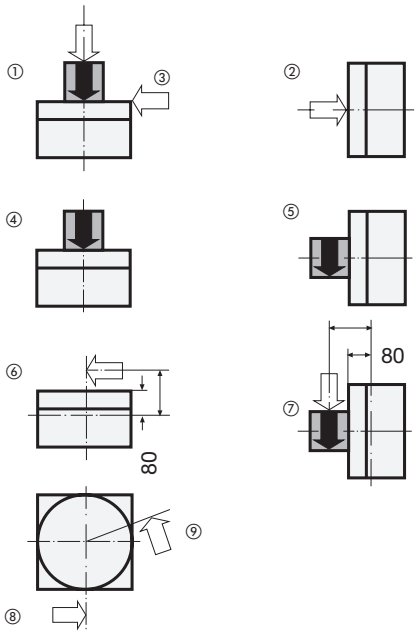

11. Installed dimensions Drawings of DXF files available to order.

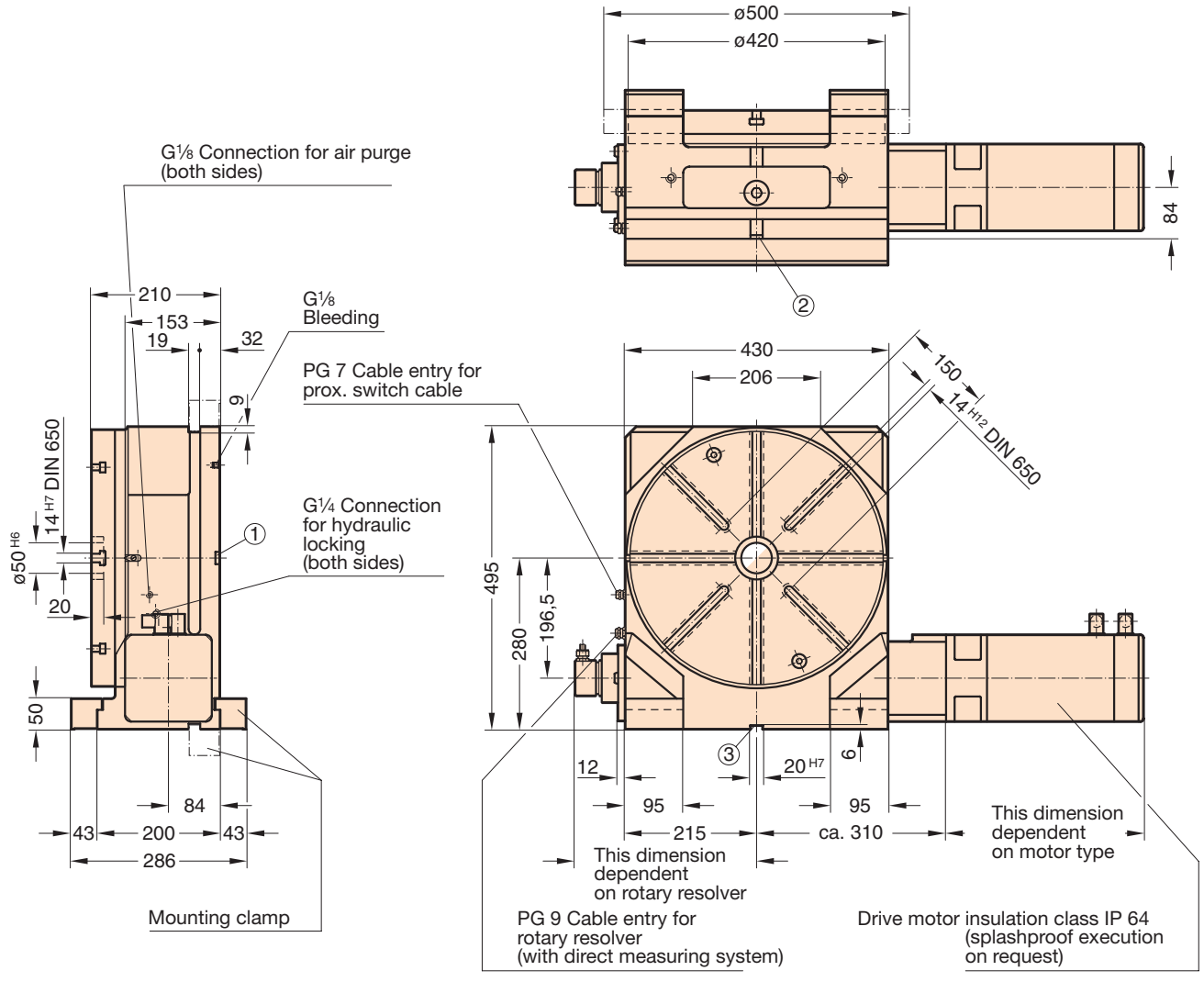

See page 8 for additional arrangements for motor and rotary resolver Reference slot (optional) indicate reqrd. location ①,②,③ with order ○

1 - 11332 - 2001 - 1 ○

Right of alterations reserved

NC 1.05 Technical Data

1. Type designation

Field 1 NC1.05.

FIBROPLAN	NC1.
Size	05.

2. Table top

Field 2

dimension	∅ □ 520		mm	0520
	∅ □ 630		mm	0630
execution	○ round	without T-slots		1
	⊕ round	with T-slots		2
	□ square	without T-slots		3
	⊞ square	with T-slots		4

Field 3

3. Locking, of rotary table spindle

Field 4

without hydraulic table clamping	0
with hydraulic table clamping	1

4. Measuring system

Field 5

see page 8

5. Drive motor arrangement

Field 6

see page 8

7. Accuracies

Positioning accuracies:		
a) with Indirect Measuring System		
in seconds of arc	∢ s	± 10
indicator reading at ∅ 520	mm	± 0,013
b) with Direct Measuring System		
in seconds of arc	∢ s	± 3
indicator reading at ∅ 520	mm	± 0,004
Runout: centre bore		
in the rotary table	mm	0,01
Runout: table top face		
(relative to ∅ 520)	mm	0,012
Parallelism: table top face to		
mounting face		
(relative to ∅ 520)	mm	0,025

Higher geometrical precision on request

6. Technical Data

Optional centre bore – max. ∅	mm	140
Table top bearing ID × OD	mm	325 × 450
Diameter of worm wheel	mm	417
Ratio:		
Worm drive ratio	i =	120
Basic version with gearwheel train	i_{tot} =	240
Table top speed (max.)	$n_{max.}$ =	10
Hydraulic table clamping:		
system pressure rating	bar	64
consumption	cm^3	8
pump delivery rating	l/min	max. 4
Any mounting attitude of FIBROPLAN		
Weight of FIBROPLAN		
(table top ∅ 520, without drive motor)	kg	approx. 360

8. Sequence of motions

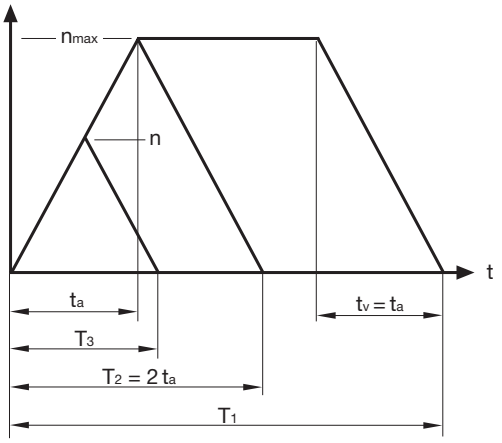

9. Switching times/moments of inertia (switching times rounded up/down)

excluding clamping process and excluding reaction times

Turning angle at table	ρ	°	10				30				45			
r.p.m. at table		min^{-1}	10,00	10,00	10,00	10,00	10,00	10,00	10,00	10,00	10,00	10,00	10,00	10,00
Moment of inertia from transport load	J	kgm^2	110	140	190	285	110	140	190	285	110	140	190	285
Angular acceleration at table	α	s^{-2}	3,50	2,80	2,10	1,40	3,50	2,80	2,10	1,40	3,50	2,80	2,10	1,40
Positioning time	T	s	0,45	0,50	0,60	0,70	0,80	0,90	1,00	1,25	1,05	1,15	1,25	1,50
Acceleration/deceleration time per	t_a, t_v	s	0,30	0,40	0,50	0,75	0,30	0,40	0,50	0,75	0,30	0,40	0,50	0,75

Turning angle at table	ρ	°	60				90				180			
r.p.m. at table		min^{-1}	10,00	10,00	10,00	10,00	10,00	10,00	10,00	10,00	10,00	10,00	10,00	10,00
Moment of inertia from transport load	J	kgm^2	110	140	190	285	110	140	190	285	110	140	190	285
Angular acceleration at table	α	s^{-2}	3,50	2,80	2,10	1,40	3,50	2,80	2,10	1,40	3,50	2,80	2,10	1,40
Positioning time	T	s	1,30	1,40	1,50	1,75	1,80	1,90	2,00	2,25	3,30	3,40	3,50	3,75
Acceleration/deceleration time per	t_a, t_v	s	0,30	0,40	0,50	0,75	0,30	0,40	0,50	0,75	0,30	0,40	0,50	0,75

1 · 11333 · 2001 · 1 ○

Ordering inform. with code no. NC1.05 . Field 1 . 2 . 3 . 4 . 5 . 6

Right of alterations reserved

10. Load data

Thrust against table top face:				
table top horizontal (load + machining forces)		N	55 000	①
Radial thrust against table top		N	65 000	③
Table top loads (workpieces + fixtures):				
table top horizontal		kg	2 500	④
Mass moment of inertia of load (workpieces + fixtures), s. 9.		kgm^2	285	
Tilting moments: table top horizontal		Nm	16 000	⑥
Tangential moment against table top (with hydr. table clamping activated)		Nm	6 000	⑧
Torque limit during rotary milling transferable by worm drive		Nm	4 200	⑨
Maximum permissible motor torque	when $i_{tot.}$ = 240	Nm	50	
Motor torque requirement for positioning only	when $i_{tot.}$ = 240	Nm	7	

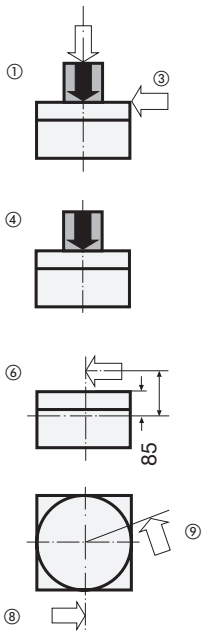

11. Installed dimensions Drawings of DXF files available to order.

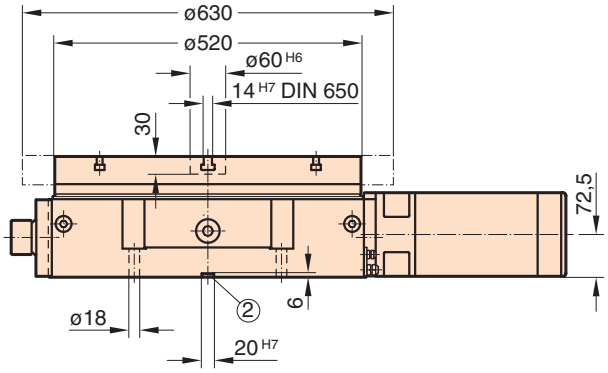

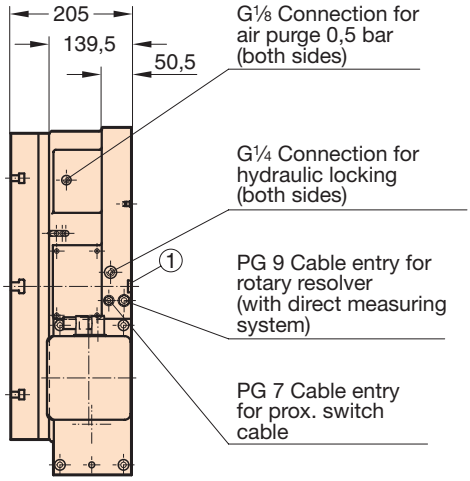

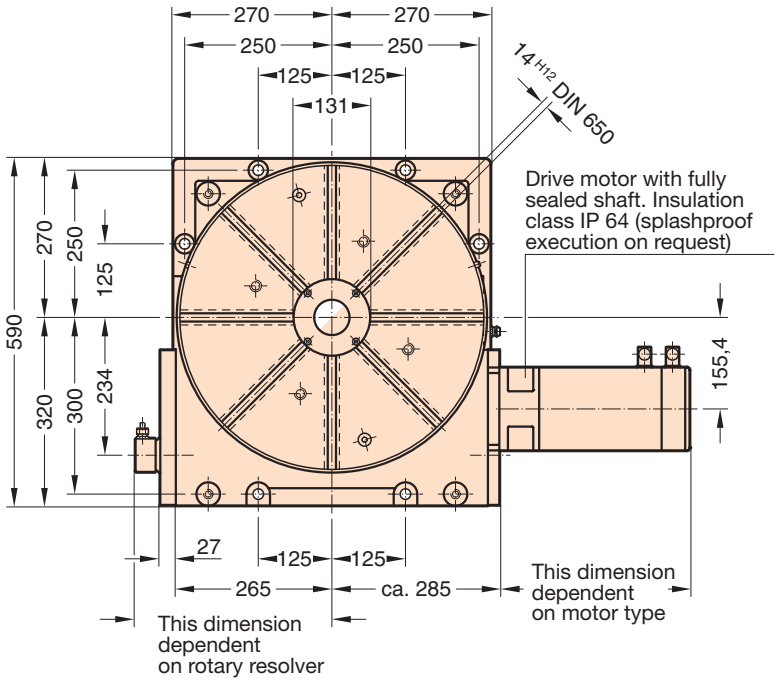

See page 8 for additional arrangements for motor and rotary resolver

Reference slot (optional) indicate reqrd. location ①,② with order ○

1 - 11334 - 2001 - 1 ○

Right of alterations reserved

NC 1.06 Technical Data

1. Type designation

Field 1: N C 1. 0 6 .

FIBROPLAN NC1.

Size 06.

2. Table top

Field 2

dimension	∅ □ 630 mm	0630	
	∅ □ 800 mm	0800	
execution	○ round without T-slots	1	
	⊕ round with T-slots	2	
	□ square without T-slots	3	
	⊞ square with T-slots	4	

Field 3 .

3. Locking, of rotary table spindle

Field 4

without hydraulic table clamping	0
with hydraulic table clamping	1

.

4. Measuring system

Field 5

see page 8

.

5. Drive motor arrangement

Field 6

see page 8

7. Accuracies

Positioning accuracies:		
a) with Indirect Measuring System		
in seconds of arc	∢ s	± 10
indicator reading at ∅ 630	mm	± 0,015
b) with Direct Measuring System		
in seconds of arc	∢ s	± 3
indicator reading at ∅ 630	mm	± 0,005
Runout: centre bore		
in the rotary table	mm	0,01
Runout: table top face		
(relative to ∅ 630)	mm	0,015
Parallelism: table top face to mounting face		
(relative to ∅ 630)	mm	0,03

Higher geometrical precision on request

6. Technical Data

Optional centre bore – max. ∅	mm	190
Table top bearing ID × OD	mm	395 × 525
Diameter of worm wheel	mm	486
Ratio:		
Worm drive ratio	i =	144
Basic version with gearwheel train	i_{tot} =	288
Table top speed (max.)	$n_{max.}$ =	8
Hydraulic table clamping:		
system pressure rating	bar	64
consumption	cm^3	10
pump delivery rating	l/min	max. 5
Any mounting attitude of FIBROPLAN		
Weight of FIBROPLAN (table top ∅ 630, without drive motor)	kg	approx. 550

8. Sequence of motions

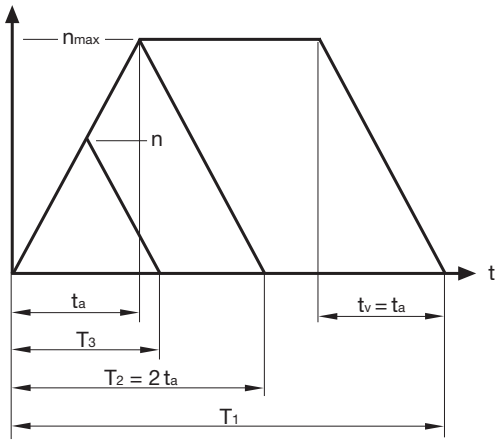

9. Switching times/moments of inertia (switching times rounded up/down)

excluding clamping process and excluding reaction times

Turning angle at table	ρ	°	10				30				45			
r.p.m. at table		min^{-1}	8,00	8,00	8,00	8,00	8,00	8,00	8,00	8,00	8,00	8,00	8,00	8,00
Moment of inertia from transport load	J	kgm^2	190	260	400	800	190	260	400	800	190	260	400	800
Angular acceleration at table	α	s^{-2}	2,80	2,10	1,40	0,70	2,80	2,10	1,40	0,70	2,80	2,10	1,40	0,70
Positioning time	T	s	0,50	0,60	0,70	1,00	0,95	1,05	1,25	1,75	1,25	1,35	1,55	2,15
Acceleration/deceleration time per	t_a, t_v	s	0,30	0,40	0,60	1,20	0,30	0,40	0,60	1,20	0,30	0,40	0,60	1,20

Turning angle at table	ρ	°	60				90				180			
r.p.m. at table		min^{-1}	8,00	8,00	8,00	8,00	8,00	8,00	8,00	8,00	8,00	8,00	8,00	8,00
Moment of inertia from transport load	J	kgm^2	190	260	400	800	190	260	400	800	190	260	400	800
Angular acceleration at table	α	s^{-2}	2,80	2,10	1,40	0,70	2,80	2,10	1,40	0,70	2,80	2,10	1,40	0,70
Positioning time	T	s	1,55	1,65	1,85	2,45	2,20	2,30	2,50	3,10	4,05	4,15	4,35	4,95
Acceleration/deceleration time per	t_a, t_v	s	0,30	0,40	0,60	1,20	0,30	0,40	0,60	1,20	0,30	0,40	0,60	1,20

1-1335 2001-1 o

Ordering inform. with code no. Field 1: N C 1. 0 6 . 2 . 3 . 4 . 5 . 6

Right of alterations reserved

10. Load data

Thrust against table top face:				
table top horizontal (load + machining forces)		N	75 000	①
Radial thrust against table top		N	80 000	③
Table top loads (workpieces + fixtures):				
table top horizontal		kg	3 500	④
Mass moment of inertia of load (workpieces + fixtures), s. 9.		kgm^2	800	
Tilting moments: table top horizontal		Nm	20 000	⑥
Tangential moment against table top				
(with hydr. table clamping activated)		Nm	8 000	⑧
Torque limit during rotary milling		Nm	7 000	⑨
transferable by worm drive				
Maximum permissible motor torque	when $i_{tot.}$ = 288	Nm	74	
Motor torque requirement for				
positioning only	when $i_{tot.}$ = 288	Nm	9,5	

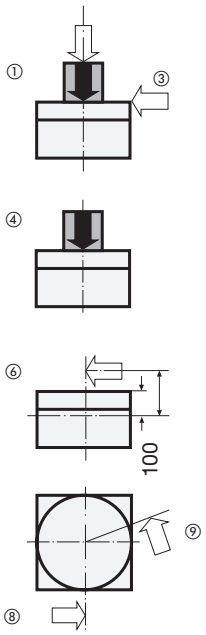

11. Installed dimensions Drawings of DXF files available to order.

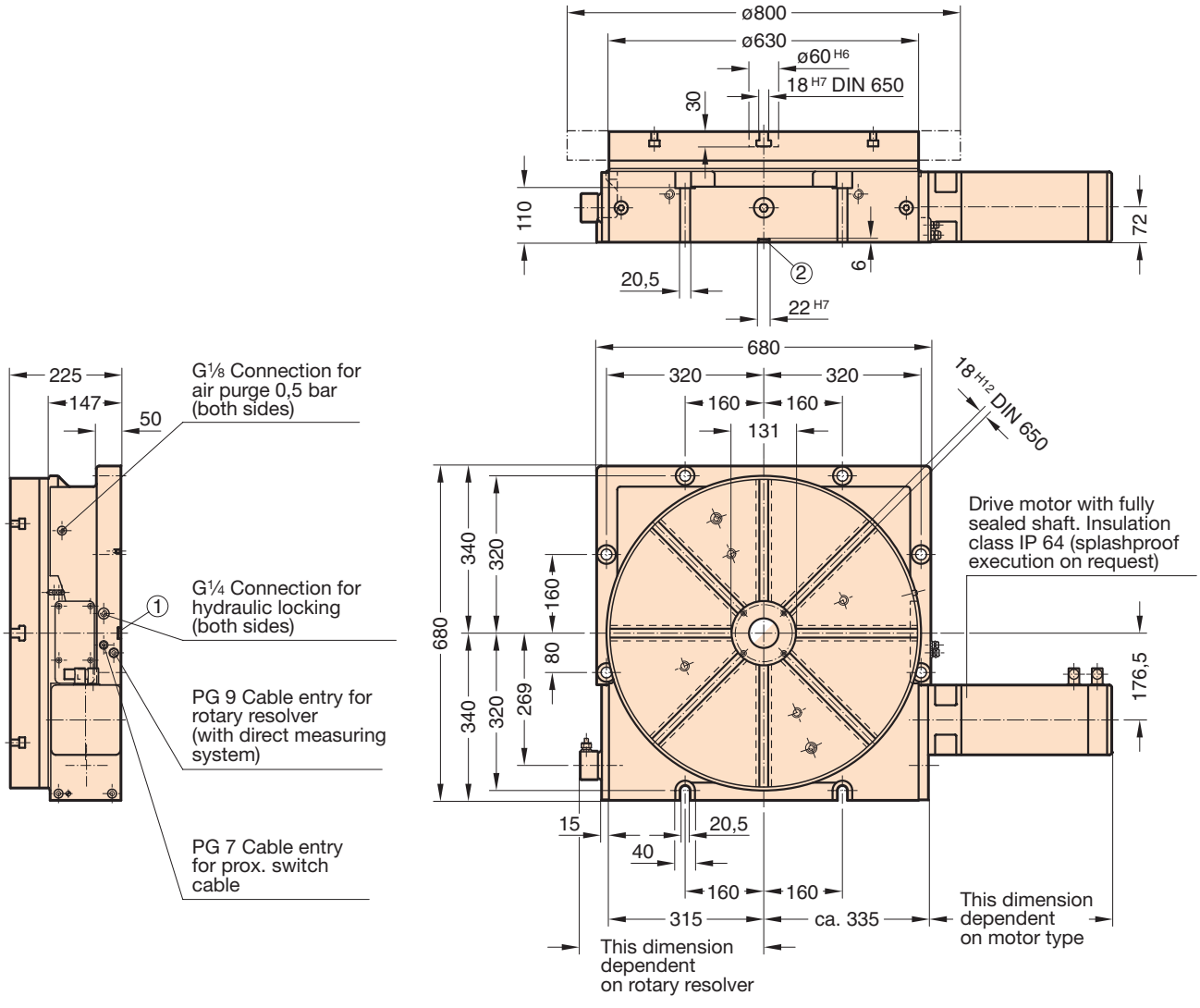

See page 8 for additional arrangements for motor and rotary resolver

Reference slot (optional) indicate reqrd. location ①,② with order ○

1 - 11336 .2001 - 1 ◦

Right of alterations reserved

NC 1.07 Technical Data

1. Type designation

Case 1

FIBROPLAN NC1.

Size 07.

N C 1. 0 7 .

2. Table top

Field 2

dimension	∅ □ 800 mm	0800	
	∅ □ 1 000 mm	1000	
execution	○ round without T-slots	1	
	⊕ round with T-slots	2	
	□ square without T-slots	3	
	⊞ square with T-slots	4	

Field 3

3. Locking, of rotary table spindle

Field 4

without hydraulic table clamping	0
with hydraulic table clamping	1

4. Measuring system

Field 5

see page 8

5. Drive motor arrangement

Field 6

see page 8

7. Accuracies

Positioning accuracies:		
a) with Indirect Measuring System		
in seconds of arc	∢ s	± 10
indicator reading at ∅ 800	mm	± 0,020
b) with Direct Measuring System		
in seconds of arc	∢ s	± 3
indicator reading at ∅ 800	mm	± 0,006
Runout: centre bore		
in the rotary table	mm	0,01
Runout: table top face		
(relative to ∅ 800)	mm	0,015
Parallelism: table top face to mounting face		
(relative to ∅ 800)	mm	0,03

Higher geometrical precision on request

6. Technical Data

Optional centre bore – max. ∅	mm	250
Table top bearing ID × OD	mm	460 × 600
Diameter of worm wheel	mm	562
Ratio:		
Worm drive ratio	i =	180
Basic version with gearwheel train	i_{tot} =	360
Table top speed (max.)	$n_{max.}$ =	6
Hydraulic table clamping:		
system pressure rating	bar	64
consumption	cm^3	12
pump delivery rating	l/min	max. 6
Any mounting attitude of FIBROPLAN		
Weight of FIBROPLAN (table top ∅ 800, without drive motor)	kg	approx. 920

8. Sequence of motions

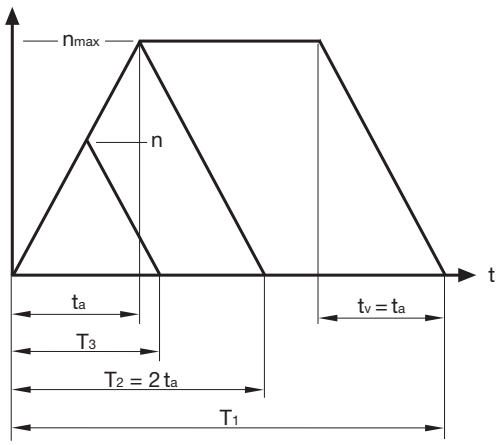

9. Switching times/moments of inertia (switching times rounded up/down)

excluding clamping process and excluding reaction times

Turning angle at table	ρ	°	10				30				45			
r.p.m. at table		min^{-1}	6,00	6,00	6,00	6,00	6,00	6,00	6,00	6,00	6,00	6,00	6,00	6,00
Moment of inertia from transport load	J	kgm^2	220	310	500	1 000	220	310	500	1 000	220	310	500	1 000
Angular acceleration at table	α	s^{-2}	2,10	1,60	1,05	0,55	2,10	1,60	1,05	0,55	2,10	1,60	1,05	0,55
Positioning time	T	s	0,60	0,70	0,85	1,15	1,15	1,25	1,45	2,00	1,55	1,65	1,85	2,45
Acceleration/deceleration time per	t_a, t_v	s	0,30	0,40	0,60	1,20	0,30	0,40	0,60	1,20	0,30	0,40	0,60	1,20

Turning angle at table	ρ	°	60				90				180			
r.p.m. at table		min^{-1}	6,00	6,00	6,00	6,00	6,00	6,00	6,00	6,00	6,00	6,00	6,00	6,00
Moment of inertia from transport load	J	kgm^2	220	310	500	1 000	220	310	500	1 000	220	310	500	1 000
Angular acceleration at table	α	s^{-2}	2,10	1,60	1,05	0,55	2,10	1,60	1,05	0,55	2,10	1,60	1,05	0,55
Positioning time	T	s	2,00	2,10	2,30	2,85	2,80	2,90	3,10	3,70	5,30	5,40	5,60	6,20
Acceleration/deceleration time per	t_a, t_v	s	0,30	0,40	0,60	1,20	0,30	0,40	0,60	1,20	0,30	0,40	0,60	1,20

1-11337 2001-1 ◦

Ordering inform. with code no. N C 1. 0 7 . [Field 1] [2] . [3] . [4] . [5] . [6]

Right of alterations reserved

10. Load data

Thrust against table top face:				
table top horizontal (load + machining forces)		N	100 000	①
Radial thrust against table top		N	115 000	③
Table top loads (workpieces + fixtures):				
table top horizontal		kg	6 000	④
Mass moment of inertia of load (workpieces + fixtures), s. 9.		kgm^2	1 000	
Tilting moments: table top horizontal		Nm	26 000	⑥
Tangential moment against table top				
(with hydr. table clamping activated)		Nm	14 000	⑧
Torque limit during rotary milling		Nm	7 000	⑨
transferable by worm drive				
Maximum permissible motor torque	when $i_{tot.}$ = 360	Nm	55	
Motor torque requirement for				
positioning only	when $i_{tot.}$ = 360	Nm	10	

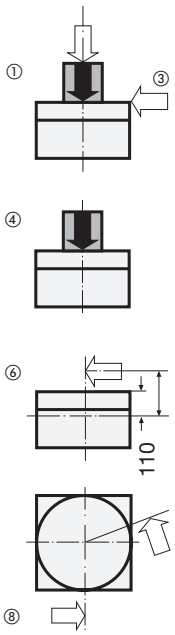

11. Installed dimensions Drawings of DXF files available to order.

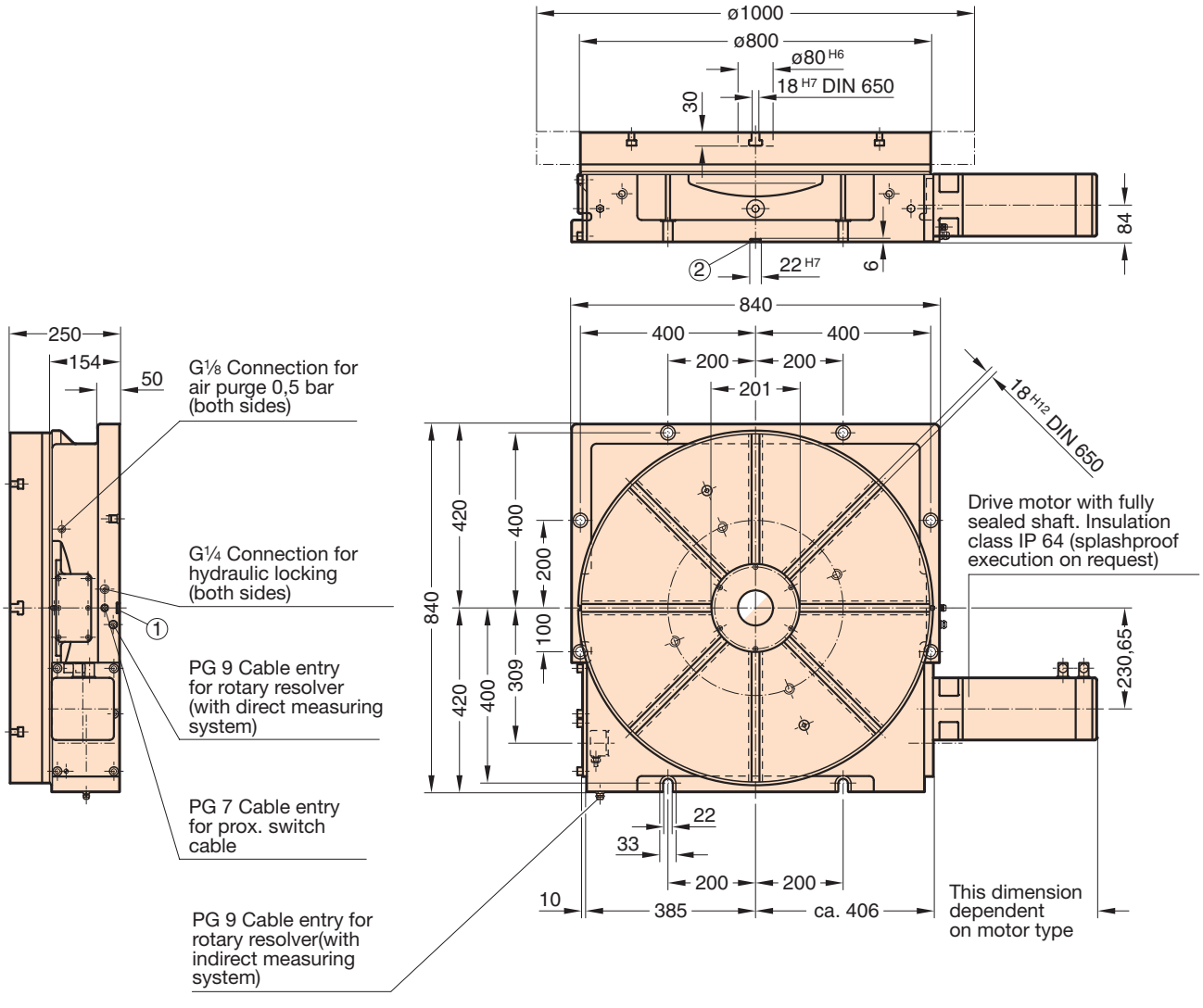

See page 8 for additional arrangements for motor and rotary resolver

Reference slot (optional) indicate reqrd. location ①,② with order ○

1 - 11338 .2001 - 1 ○

Right of alterations reserved

NC 1.08 Technical Data

1. Type designation

Field 1

FIBROPLAN NC1.

Size 08.

N C 1. 0 8 .

2. Table top

Field 2

dimension	∅ □ 1 000 mm	1000	
	∅ □ 1 250 mm	1250	
execution	○ round without T-slots		1
	⊕ round with T-slots		2
	□ square without T-slots		3
	⊞ square with T-slots		4

Field 3 .

3. Locking, of rotary table spindle

Field 4

without hydraulic table clamping	0
with hydraulic table clamping	1

.

4. Measuring system

Field 5

see page 8

.

5. Drive motor arrangement

Field 6

see page 8

7. Accuracies

Positioning accuracies:		
a) with Indirect Measuring System		
in seconds of arc	∢ s	± 10
indicator reading at ∅ 1 000	mm	± 0,024
b) with Direct Measuring System		
in seconds of arc	∢ s	± 3
indicator reading at ∅ 1 000	mm	± 0,007
Runout: centre bore		
in the rotary table	mm	0,01
Runout: table top face		
(relative to ∅ 1 000)	mm	0,02
Parallelism: table top face to mounting face		
(relative to ∅ 1 000)	mm	0,04

Higher geometrical precision on request

6. Technical Data

Optional centre bore – max. ∅	mm	420
Table top bearing ID × OD	mm	650 × 870
Diameter of worm wheel	mm	805
Ratio:		
Worm drive ratio	i =	240
Basic version with gearwheel train	i_{tot} =	480
Table top speed (max.)	$n_{max.}$ =	6
Hydraulic table clamping:		
system pressure rating	bar	64
consumption	cm^3	15
pump delivery rating	l/min	max. 7
Any mounting attitude of FIBROPLAN		
Weight of FIBROPLAN (table top ∅ 1 000, without drive motor)	kg	approx. 1 550

8. Sequence of motions

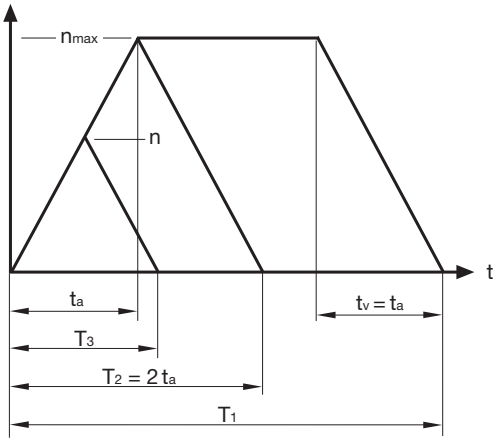

9. Switching times/moments of inertia (switching times rounded up/down)

excluding clamping process and excluding reaction times

Turning angle at table	ρ	°	10				30				45			
r.p.m. at table		min^{-1}	6,00	6,00	6,00	6,00	6,00	6,00	6,00	6,00	6,00	6,00	6,00	6,00
Moment of inertia from transport load	J	kgm^2	750	1 100	1 750	3 600	750	1 100	1 750	3 600	750	1 100	1 750	3 600
Angular acceleration at table	α	s^{-2}	1,60	1,20	0,80	0,40	1,60	1,20	0,80	0,40	1,60	1,20	0,80	0,40
Positioning time	T	s	0,70	0,80	0,95	1,35	1,25	1,40	1,65	2,35	1,65	1,80	2,05	2,85
Acceleration/deceleration time per	t_a, t_v	s	0,40	0,55	0,80	1,60	0,40	0,55	0,80	1,60	0,40	0,55	0,80	1,60

Turning angle at table	ρ	°	60				90				180			
r.p.m. at table		min^{-1}	6,00	6,00	6,00	6,00	6,00	6,00	6,00	6,00	6,00	6,00	6,00	6,00
Moment of inertia from transport load	J	kgm^2	750	1 100	1 750	3 600	750	1 100	1 750	3 600	750	1 100	1 750	3 600
Angular acceleration at table	α	s^{-2}	1,60	1,20	0,80	0,40	1,60	1,20	0,80	0,40	1,60	1,20	0,80	0,39
Positioning time	T	s	2,10	2,20	2,45	3,30	2,90	3,05	3,30	4,10	5,40	5,55	5,80	6,60
Acceleration/deceleration time per	t_a, t_v	s	0,40	0,55	0,80	1,60	0,40	0,55	0,80	1,60	0,40	0,55	0,80	1,60

1-11339 2001-1 ◦

Ordering inform. with code no. Field 1 2 3 4 5 6

N C 1. 0 8 . . . . . .

Right of alterations reserved

10. Load data

Thrust against table top face:				
table top horizontal (load + machining forces)		N	180 000	①
Radial thrust against table top		N	250 000	③
Table top loads (workpieces + fixtures):				
table top horizontal		kg	10 000	④
Mass moment of inertia of load (workpieces + fixtures), s. 9.		kgm^2	3 600	
Tilting moments: table top horizontal		Nm	60 000	⑥
Tangential moment against table top				
(with hydr. table clamping activated)		Nm	25 000	⑧
Torque limit during rotary milling		Nm	14 000	⑨
transferable by worm drive				
Maximum permissible motor torque	when $i_{tot.}$ = 480	Nm	90	
Motor torque requirement for				
positioning only	when $i_{tot.}$ = 480	Nm	15	

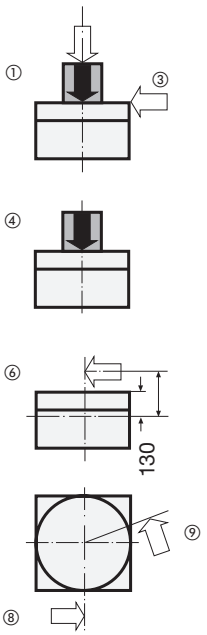

11. Installed dimensions Drawings of DXF files available to order.

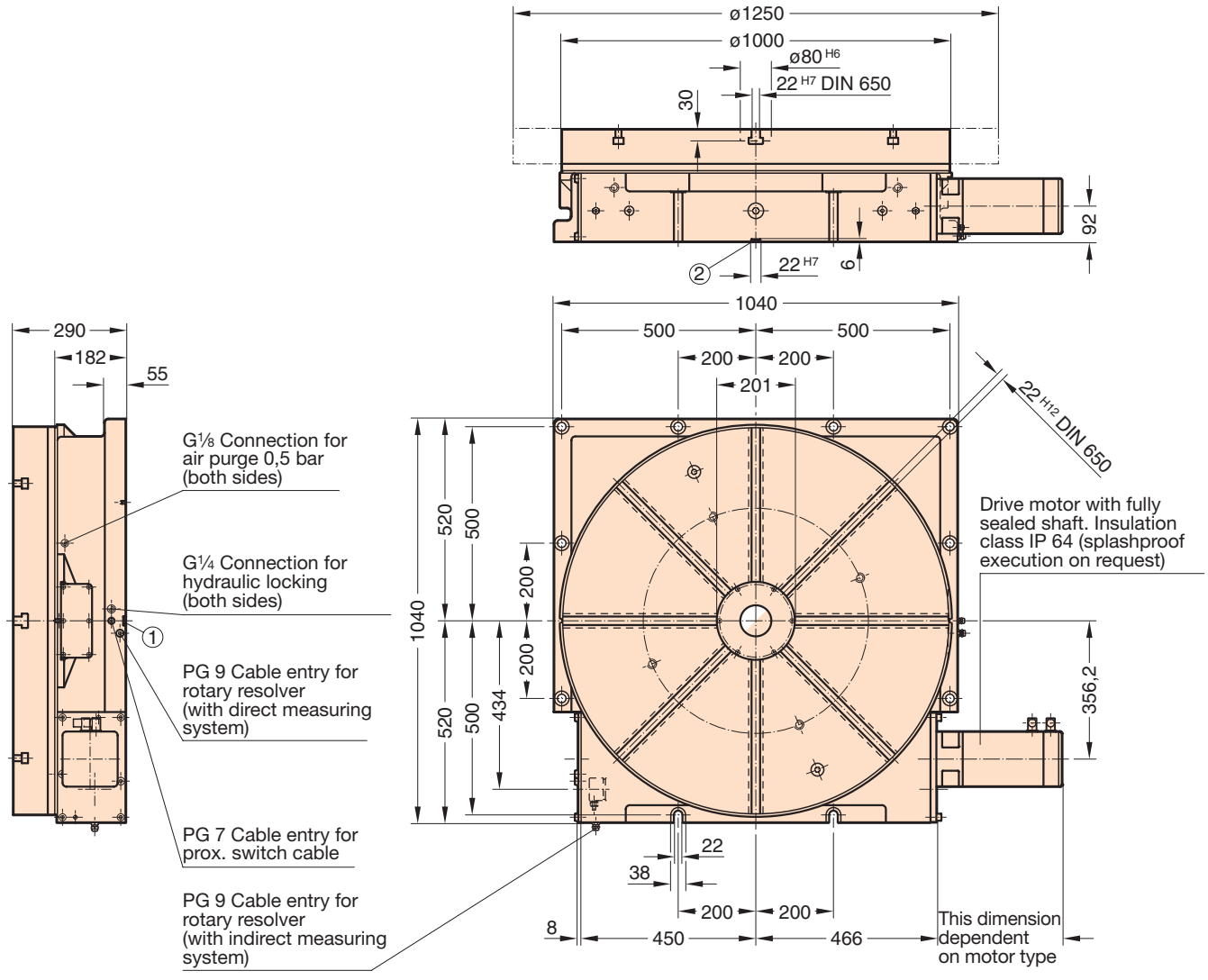

See page 8 for additional arrangements for motor and rotary resolver

Reference slot (optional) indicate reqrd. location ①,② with order ○

1 · 11340 · 2001 · 1 ○

Right of alterations reserved

NC 1.09 Technical Data

1. Type designation

Field 1

FIBROPLAN NC1.

Size 09.

N C 1. 0 9 .

2. Table top

Field 2

dimension	∅ □ 1 250 mm	1250	
	∅ □ 1 500 mm	1500	
execution	○ round without T-slots		1
	⊕ round with T-slots		2
	□ square without T-slots		3
	⊞ square with T-slots		4

Field 3

3. Locking, of rotary table spindle

Field 4

without hydraulic table clamping	0
with hydraulic table clamping	1

4. Measuring system

Field 5

see page 8

5. Drive motor arrangement

Field 6

see page 8

7. Accuracies

Positioning accuracies:		
a) with Indirect Measuring System		
in seconds of arc	∢ s	± 10
indicator reading at ∅ 1 250	mm	± 0,03
b) with Direct Measuring System		
in seconds of arc	∢ s	± 3
indicator reading at ∅ 1 250	mm	± 0,009
Runout: centre bore		
in the rotary table	mm	0,01
Runout: table top face		
(relative to ∅ 1 250)	mm	0,02
Parallelism: table top face to mounting face		
(relative to ∅ 1 250)	mm	0,04

Higher geometrical precision on request

6. Technical Data

Optional centre bore – max. ∅	mm	520
Table top bearing ID × OD	mm	850 × 1 095
Diameter of worm wheel	mm	1 020
Ratio:		
Worm drive ratio	i =	320
Basic version with gearwheel train	i_{tot} =	480
Table top speed (max.)	$n_{max.}$ =	4,2
Hydraulic table clamping:		
system pressure rating	bar	64
consumption	cm^3	20
pump delivery rating	l/min	max. 10
Any mounting attitude of FIBROPLAN		
Weight of FIBROPLAN (table top ∅ 1 250, without drive motor)	kg	approx. 2 500

8. Sequence of motions

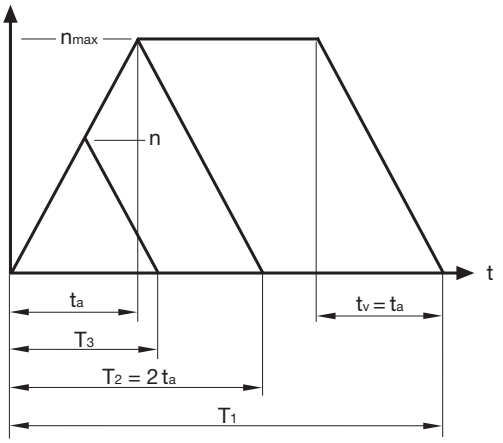

9. Switching times/moments of inertia (switching times rounded up/down)

excluding clamping process and excluding reaction times

Turning angle at table	ρ	°	10				30				45			
r.p.m. at table		min^{-1}	4,20	4,20	4,20	4,20	4,20	4,20	4,20	4,20	4,20	4,20	4,20	4,20
Moment of inertia from transport load	J	kgm^2	1 500	2 250	3 500	7 500	1 500	2 250	3 500	7 500	1 500	2 250	3 500	7 500
Angular acceleration at table	α	s^{-2}	0,90	0,65	0,45	0,20	0,90	0,65	0,45	0,20	0,90	0,65	0,45	0,20
Positioning time	T	s	0,90	1,05	1,30	1,85	1,70	1,90	2,25	3,15	2,30	2,50	2,85	3,90
Acceleration/deceleration time per	t_a, t_v	s	0,50	0,70	1,05	2,10	0,50	0,70	1,05	2,10	0,50	0,70	1,05	2,10

Turning angle at table	ρ	°	60				90				180			
r.p.m. at table		min^{-1}	4,20	4,20	4,20	4,20	4,20	4,20	4,20	4,20	4,20	4,20	4,20	4,20
Moment of inertia from transport load	J	kgm^2	1 500	2 250	3 500	7 500	1 500	2 250	3 500	7 500	1 500	2 250	3 500	7 500
Angular acceleration at table	α	s^{-2}	0,90	0,65	0,45	0,20	0,90	0,65	0,45	0,20	0,90	0,65	0,45	0,20
Positioning time	T	s	2,90	3,10	3,45	4,50	4,10	4,30	4,65	5,70	7,65	7,85	8,20	9,25
Acceleration/deceleration time per	t_a, t_v	s	0,50	0,70	1,05	2,10	0,50	0,70	1,05	2,10	0,50	0,70	1,05	2,10

1-11341 2001-1 ◦

Ordering inform. with code no. Field 1 2 3 4 5 6 — N C 1. 0 9 . . . . . .

Right of alterations reserved

10. Load data

Thrust against table top face:				
table top horizontal (load + machining forces)		N	240 000	①
Radial thrust against table top		N	300 000	③
Table top loads (workpieces + fixtures):				
table top horizontal		kg	12 000	④
Mass moment of inertia of load (workpieces + fixtures), s. 9.		kgm^2	7 500	
Tilting moments: table top horizontal		Nm	80 000	⑥
Tangential moment against table top				
(with hydr. table clamping activated)		Nm	32 000	⑧
Torque limit during rotary milling		Nm	17 000	⑨
transferable by worm drive				
Maximum permissible motor torque	when $i_{tot.}$ = 480	Nm	110	
Motor torque requirement for				
positioning only	when $i_{tot.}$ = 480	Nm	20	

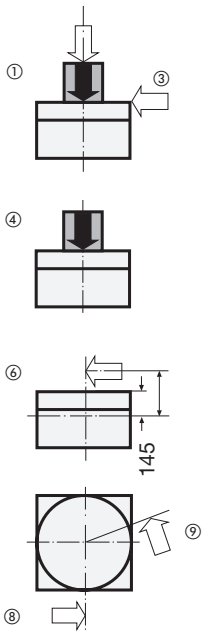

11. Installed dimensions Drawings of DXF files available to order.

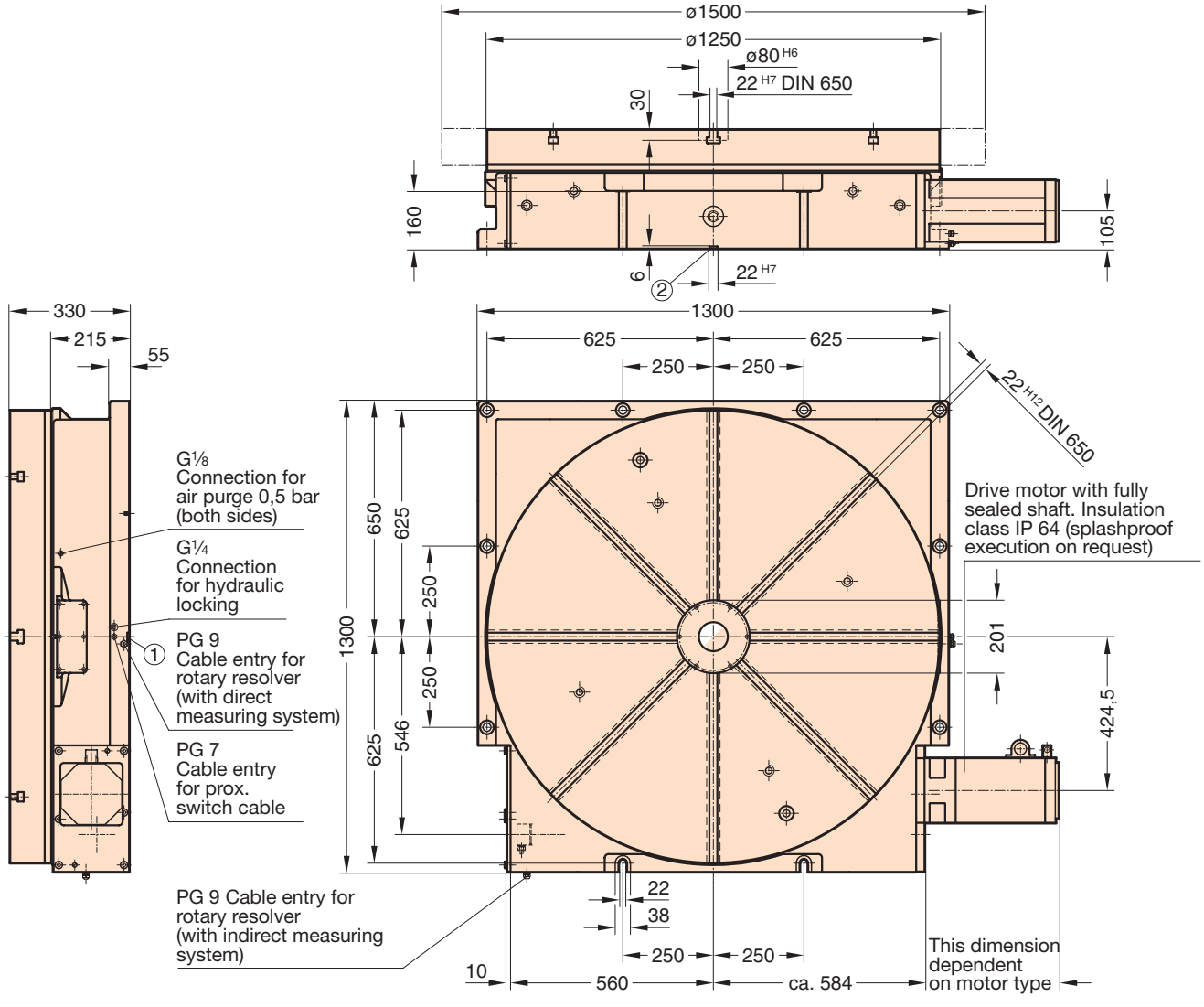

See page 8 for additional arrangements for motor and rotary resolver

Reference slot (optional) indicate reqrd. location ①,② with order ○

1-11342-2001-1 ○

Right of alterations reserved

NC 1.10 Technical Data

1. Type designation

Field 1: N C 1. 1 0 .

FIBROPLAN NC1.

Size 10.

2. Table top

Field 2: 1600 .

dimension	∅ □ 240	mm	
execution	○ round without T-slots		1
	⊕ round with T-slots		2
	□ square without T-slots		3
	⊞ square with T-slots		4

Field 3: .

3. Locking, of rotary table spindle

Field 4: .

without hydraulic table clamping	0
with hydraulic table clamping	1

4. Measuring system

Field 5: .

see page 8

5. Drive motor arrangement

Field 6:

see page 8

7. Accuracies

Positioning accuracies:		
a) with Indirect Measuring System		
in seconds of arc	∢ s	± 10
indicator reading at ∅ 1600	mm	± 0,039
b) with Direct Measuring System		
in seconds of arc	∢ s	± 3
indicator reading at ∅ 1600	mm	± 0,012
Runout: centre bore		
in the rotary table	mm	0,01
Runout: table top face		
(relative to ∅ 1600)	mm	0,025
Parallelism: table top face to mounting face		
(relative to ∅ 1600)	mm	0,05

6. Technical Data

Optional centre bore – max. ∅	mm	630
Table top bearing ID × OD	mm	1030 × 1300
Diameter of worm wheel	mm	1215
Ratio:		
Worm drive ratio	i =	320
Basic version with gearwheel train	i_{tot} =	480
Table top speed (max.)	$n_{max.}$ =	3,1
Hydraulic table clamping:		
system pressure rating	bar	64
consumption	cm^3	25
pump delivery rating	l/min	max. 12
Any mounting attitude of FIBROPLAN		
Weight of FIBROPLAN (table top ∅ 1600, without drive motor)	kg	approx. 4000

8. Sequence of motions

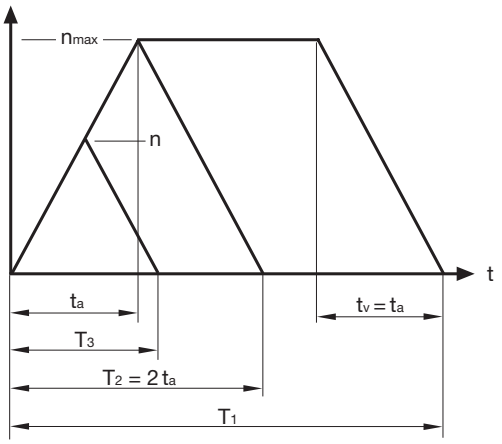

9. Switching times/moments of inertia (switching times rounded up/down)

excluding clamping process and excluding reaction times

Turning angle at table	ρ	°	10				30				45			
r.p.m. at table		min^{-1}	3,10	3,10	3,10	3,10	3,10	3,10	3,10	3,10	3,10	3,10	3,10	3,10
Moment of inertia from transport load	J	kgm^2	3000	5000	7000	12000	3000	5000	7000	12000	3000	5000	7000	12000
Angular acceleration at table	α	s^{-2}	0,65	0,45	0,30	0,20	0,65	0,45	0,30	0,20	0,65	0,45	0,30	0,20
Positioning time	T	s	1,05	1,25	1,50	1,85	2,10	2,35	2,65	3,15	2,95	3,15	3,50	4,00
Acceleration/deceleration time per	t_a, t_v	s	0,50	0,70	1,05	1,55	0,50	0,70	1,05	1,55	0,50	0,70	1,05	1,55

Turning angle at table	ρ	°	60				90				180			
r.p.m. at table		min^{-1}	3,10	3,10	3,10	3,10	3,10	3,10	3,10	3,10	3,10	3,10	3,10	3,10
Moment of inertia from transport load	J	kgm^2	3000	5000	7000	12000	3000	5000	7000	12000	3000	5000	7000	12000
Angular acceleration at table	α	s^{-2}	0,65	0,45	0,30	0,20	0,65	0,45	0,30	0,20	0,65	0,45	0,30	0,20
Positioning time	T	s	3,75	3,95	4,30	4,80	5,35	5,55	5,90	6,40	10,20	10,40	10,75	11,25
Acceleration/deceleration time per	t_a, t_v	s	0,50	0,70	1,05	1,55	0,50	0,70	1,05	1,55	0,50	0,70	1,05	1,55

1-1343 2001-1 ◦

Ordering inform. with code no. Field 1: N C 1. 1 0 . 2 . 3 . 4 . 5 . 6

Right of alterations reserved

10. Load data

Thrust against table top face:				
table top horizontal (load + machining forces)		N	350 000	①
Radial thrust against table top		N	400 000	③
Table top loads (workpieces + fixtures):				
table top horizontal		kg	20 000	④
Mass moment of inertia of load (workpieces + fixtures), s. 9.		kgm^2	12 000	
Tilting moments: table top horizontal		Nm	150 000	⑥
Tangential moment against table top				
(with hydr. table clamping activated)		Nm	40 000	⑧
Torque limit during rotary milling		Nm	24 000	⑨
transferable by worm drive				
Maximum permissible motor torque	when $i_{tot.}$ = 480	Nm	145	
Motor torque requirement for				
positioning only	when $i_{tot.}$ = 480	Nm	27	

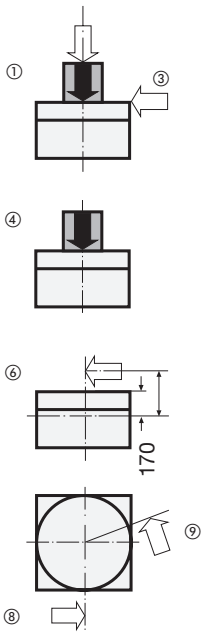

11. Installed dimensions Drawings of DXF files available to order.

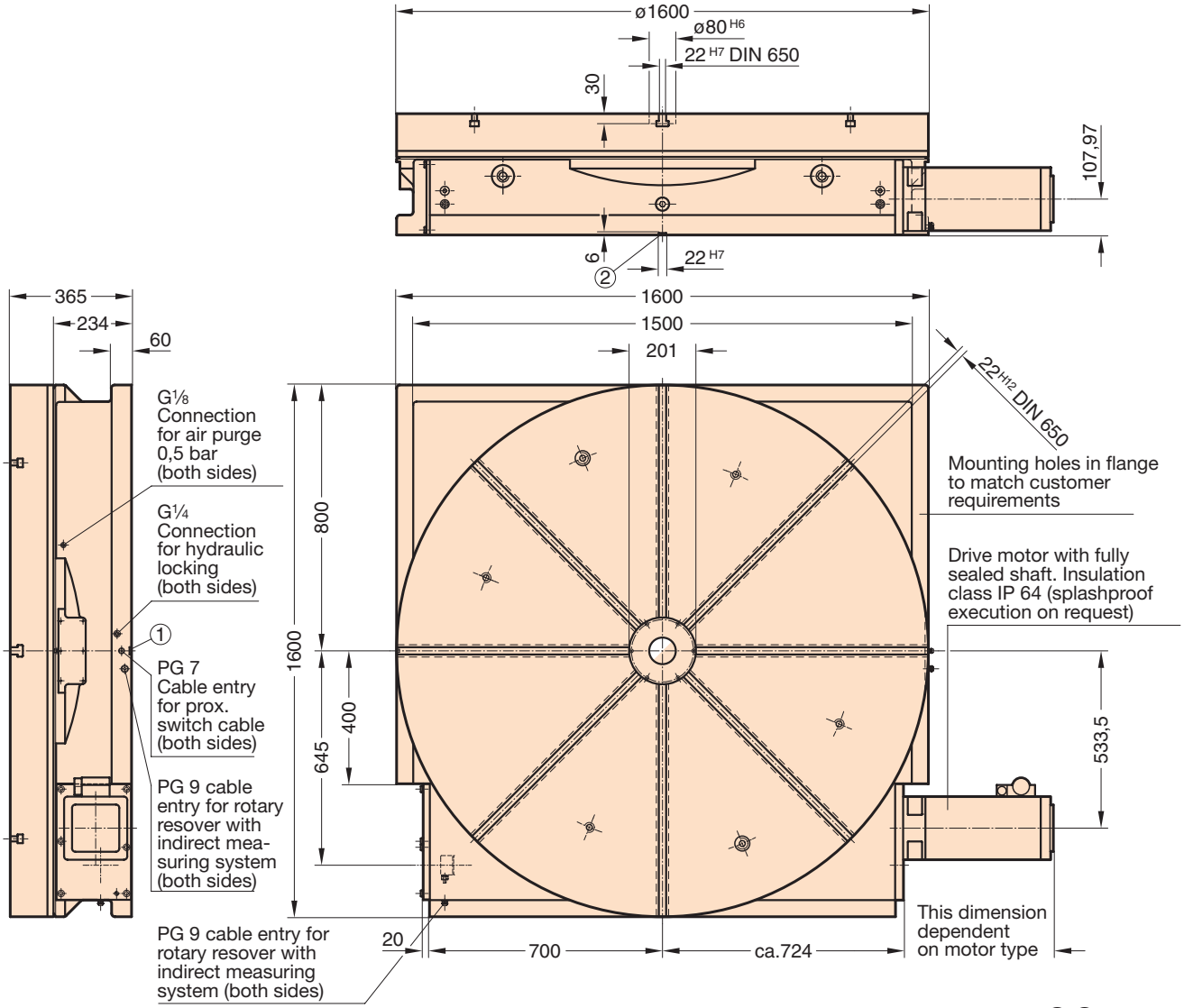

See page 8 for additional arrangements for motor and rotary resolver

Reference slot (optional) indicate reqrd. location ①,② with order ○

1 · 11344 · 2001 · 1 ○

Right of alterations reserved

FIBROPLAN®
Special execution

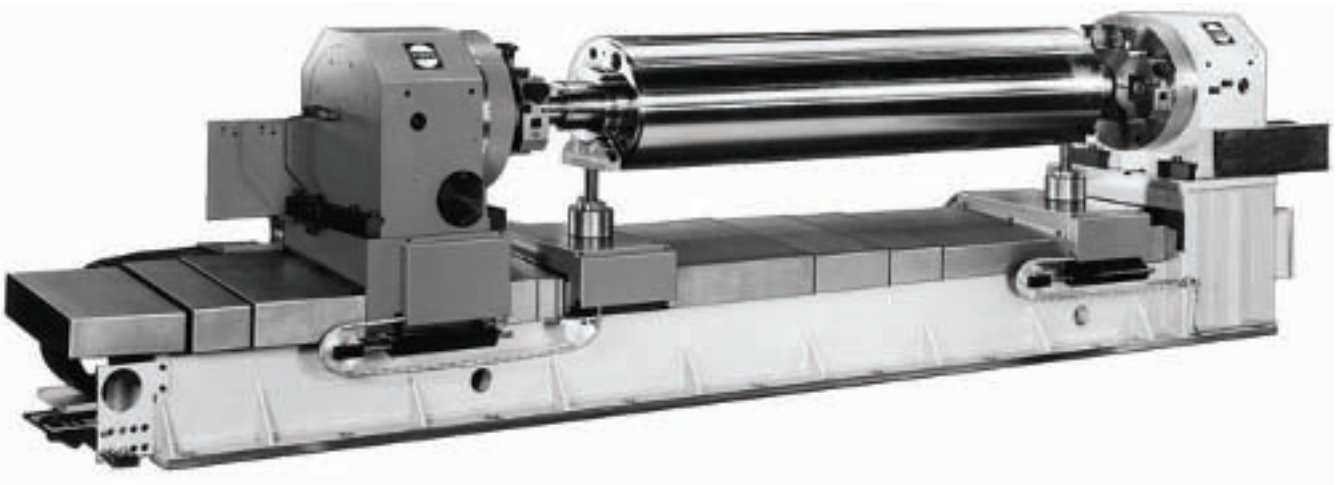

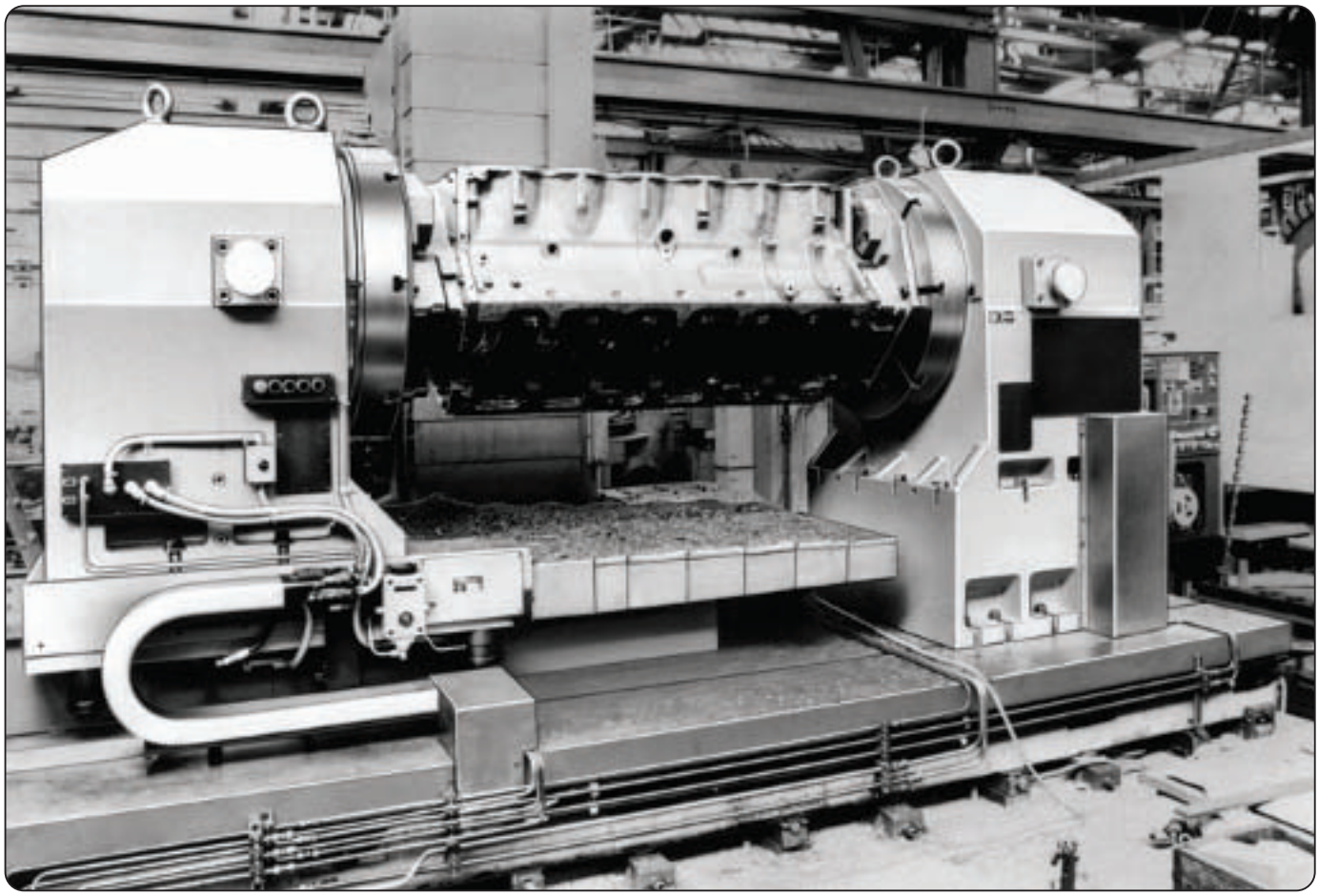

1-11345-2001-1 o

Right of alterations reserved

Program
FIBROPLAN® Vertical

Model		Vertical								
		NC 2.01	NC 2.03	NC 2.04	NC 2.05	NC 2.06	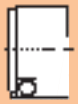 NC 2.07	NC 2.08	NC 2.09	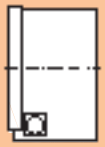 NC 2.10
Specification on	Page	32/33	34/35	36/37	38/39	40/41	42/43	44/45	46/47	48/49
Comparable size in Standard-range:										
Specifications see page 11		NC 1.02	NC 1.03	NC 1.04						
General Dimensions										
table top dims. (∅ or □)	mm	160	340/400	420/500	520/630	630/800	800/1000	1000/1250	1250/1500	1600
centre height table top	mm	130	245	280	360	360/440	440/550	550/670	670/800	900
bearing dims. (I.D.x O.D.)	mm	80×150	200×300	260×385	325×450	460×600	580×750	650×870	850×1095	1030×1300
Capacities (maximum values)										
thrust against table top face	N	5000	30000	35000	45000	75000	100000	120000	160000	200000
table top loading (workpieces + fixtures)	kg	150	600	800	1200	2000	3000	6000	8000	12000
tilting moments	Nm	1500	6300	10000	16000	26000	32000	48000	60000	110000
torque exerted in rotary milling	Nm	300	1900	3500	4200	7000	7000	14000	17000	24000
tangential torque, exerted against table top clamped hydraulically	Nm	700	2000	4000	6000	8000	14000	25000	32000	40000
Accuracies										
positioning accuracy a) with Indirect Measuring System″		± 20	± 15	± 10	± 10	± 10	± 10	± 10	± 10	± 10
b) with Direct Measuring System″ (dependent on resolver type)		± 3	± 3	± 3	± 3	± 3	± 3	± 3	± 3	± 3
runout: central bore table top (TIR)	mm	0,01	0,01	0,01	0,01	0,01	0,01	0,01	0,01	0,01
runout: table top face (TIR)	mm	0,01	0,01	0,01	0,012	0,015	0,015	0,02	0,02	0,025
Gear Ratios/ Table top Speeds										
total drive ratio motor/ table top	i total	144	120/240	120/240	240	288	360	480	480	480
table top rotational speed (max.)	min^{-1}	27,5	12,5	10	10	8	6	6	4,2	3,1

1 · 11346 · 2001 · 1 ◦

Right of alterations reserved

NC 2.01 Technical Data

1. Type designation

Field 1: N C 2. 0 1 .

FIBROPLAN NC2.

Size 01.

2. Table top

Field 2

dimension	∅ □ 160 mm	0160	
execution	○ round without T-slots	1	
	⊕ round with T-slots	2	
	□ square without T-slots	3	
	⊞ square with T-slots	4	

Field 3

3. Locking, of rotary table spindle

Field 4

without hydraulic table clamping	0
with hydraulic table clamping	1

4. Measuring system

Field 5

see page 8

5. Drive motor arrangement

Field 6

see page 8

7. Accuracies

Positioning accuracies:		
a) with Indirect Measuring System		
in seconds of arc	∢ s	± 20 (± 15 on request)
indicator reading at ∅ 160	mm	± 0,008
b) with Direct Measuring System		
in seconds of arc	∢ s	± 3
indicator reading at ∅ 160	mm	± 0,0012
Runout: centre bore		
in the rotary table	mm	0,01
Runout: table top face		
(relative to ∅ 160)	mm	0,01
Squareness: table top face to mounting face		
(relative to ∅ 160)	mm	0,02

Higher geometrical precision on request

6. Technical Data

Optional centre bore – max. ∅	mm	25
Table top bearing ID × OD	mm	80 × 150
Diameter of worm wheel	mm	130
Ratio:		
Worm drive ratio	i =	72
Basic version with gearwheel train	i_{tot} =	144
Table top speed (max.)	$n_{max.}$ =	27,5
Hydraulic table clamping:		
system pressure rating	bar	64
consumption	cm^3	2
pump delivery rating	l/min	max. 2
Any mounting attitude of FIBROPLAN		
Weight of FIBROPLAN (table top ∅ 160, without drive motor)	kg	approx. 45

8. Sequence of motions

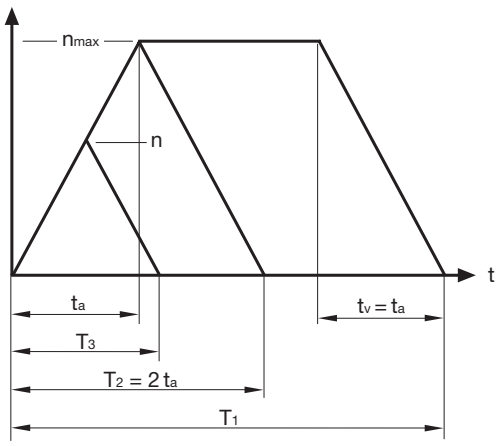

9. Switching times/moments of inertia (switching times rounded up/down)

excluding clamping process and excluding reaction times

Turning angle at table	ρ	°	10				30				45			
r.p.m. at table		min^{-1}	27,50	27,50	27,50	27,50	27,50	27,50	27,50	27,50	27,50	27,50	27,50	27,50
Moment of inertia from transport load	J	kgm^2	4	6	8	10	4	6	8	10	4	6	8	10
Angular acceleration at table	α	s^{-2}	14,40	10,50	7,85	6,30	14,40	10,50	7,85	6,30	14,40	10,50	7,85	6,30
Positioning time	T	s	0,25	0,25	0,30	0,35	0,40	0,45	0,55	0,60	0,50	0,55	0,65	0,70
Acceleration/deceleration time per	t_a, t_v	s	0,20	0,30	0,40	0,45	0,20	0,30	0,40	0,45	0,20	0,30	0,40	0,45

Turning angle at table	ρ	°	60				90				180			
r.p.m. at table		min^{-1}	27,50	27,50	27,50	27,50	27,50	27,50	27,50	27,50	27,50	27,50	27,50	27,50
Moment of inertia from transport load	J	kgm^2	4	6	8	10	4	6	8	10	4	6	8	10
Angular acceleration at table	α	s^{-2}	14,40	10,50	7,85	6,30	14,40	10,50	7,85	6,30	14,40	10,50	7,85	6,30
Positioning time	T	s	0,55	0,65	0,75	0,85	0,75	0,85	0,90	1,00	1,30	1,40	1,45	1,55
Acceleration/deceleration time per	t_a, t_v	s	0,20	0,30	0,40	0,45	0,20	0,30	0,40	0,45	0,20	0,30	0,40	0,45

1-11347 2001-1 ◦

Ordering inform. with code no. Feld 1: N C 2. 0 1 . [2] . [3] . [4] . [5] . [6]

Right of alterations reserved

10. Load data

Thrust against table top face:				
table top horizontal (load + machining forces)		N	5 000	②
Radial thrust against table top		N	12 000	③
Table top loads (workpieces + fixtures):				
table top horizontal		kg	150	⑤
Mass moment of inertia of load (workpieces + fixtures), s. 9.		kgm^2	10	
Tilting moments:				
incl. moment exerted by workpieces + fixtures		Nm	1 500	⑦
Tangential moment against table top				
(with hydr. table clamping activated)		Nm	700	⑧
Torque limit during rotary milling		Nm	300	⑨
transferable by worm drive				
Maximum permissible motor torque	when $i_{tot.}$ = 144	Nm	9	
Motor torque requirement for positioning only	when $i_{tot.}$ = 144	Nm	2	

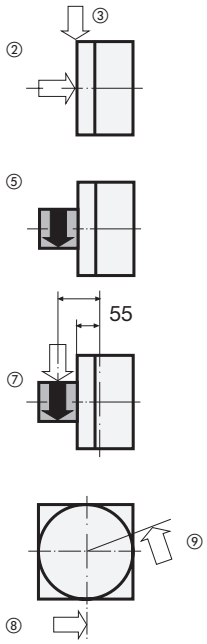

11. Installed dimensions Drawings of DXF files available to order.

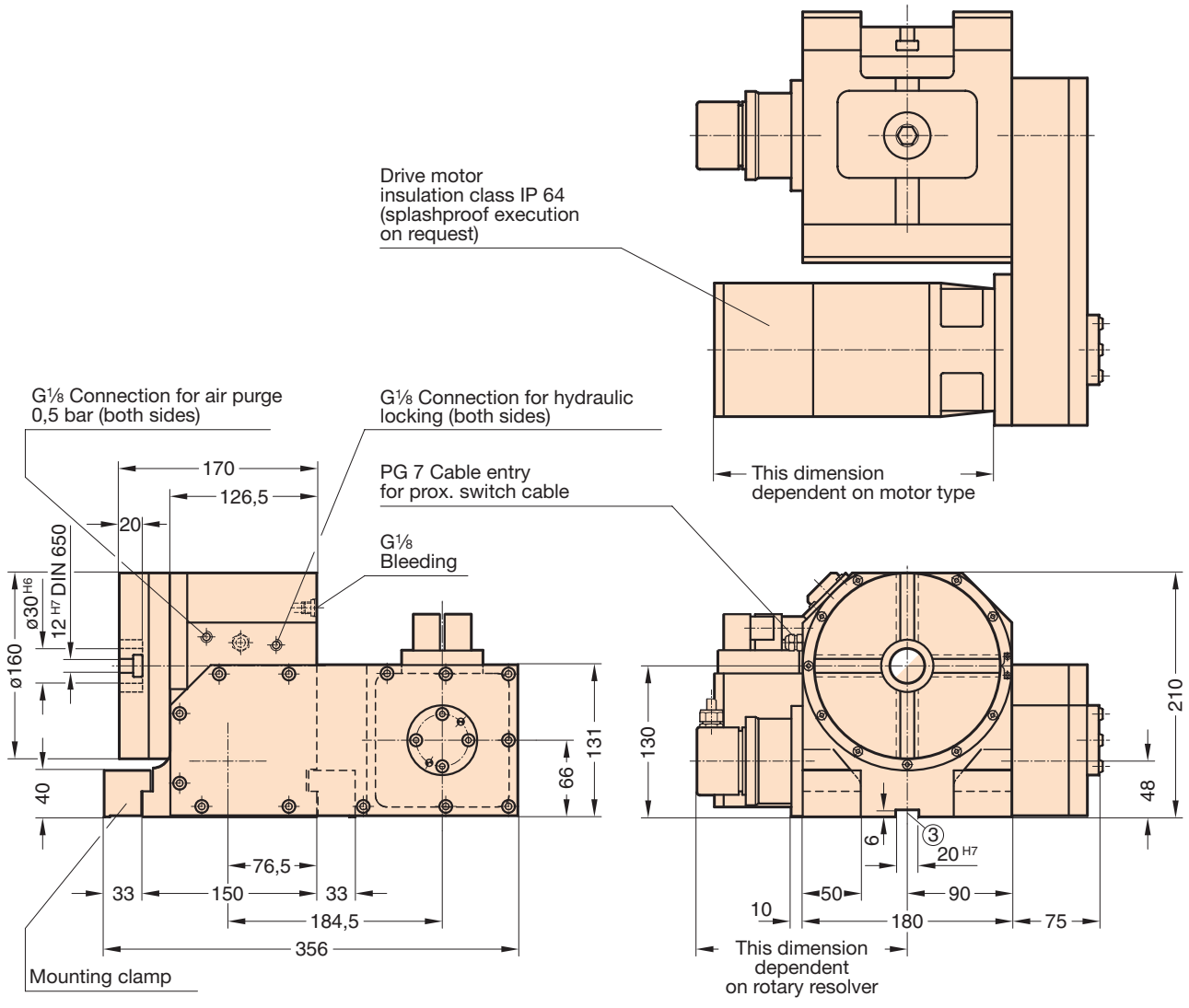

See page 8 for additional arrangements for motor and rotary resolver

Reference slot (optional) indicate reqrd. location ③ with order ○

1 : 11348 .2001- 1 ○

Right of alterations reserved

NC 2.03 Technical Data

1. Type designation

Field 1: N C 2. 0 3 .

FIBROPLAN NC2.

Size 03.

2. Table top

Field 2

dimension	∅ □ 340 mm	0340	
	∅ □ 400 mm	0400	
execution	○ round without T-slots		1
	⊕ round with T-slots		2
	□ square without T-slots		3
	⊞ square with T-slots		4

Field 3

3. Locking, of rotary table spindle

Field 4

without hydraulic table clamping	0
with hydraulic table clamping	1

4. Measuring system

Field 5

see page 8

5. Drive motor arrangement

Field 6

see page 8

7. Accuracies

Positioning accuracies:		
a) with Indirect Measuring System		
in seconds of arc	∢ s	± 15 (± 10 on request)
indicator reading at ∅ 340	mm	± 0,012
b) with Direct Measuring System		
in seconds of arc	∢ s	± 3
indicator reading at ∅ 340	mm	± 0,0025
Runout: centre bore		
in the rotary table	mm	0,01
Runout: table top face		
(relative to ∅ 340)	mm	0,01
Squareness: table top face to mounting face		
(relative to ∅ 340)	mm	0,02

Higher geometrical precision on request

6. Technical Data

Optional centre bore – max. ∅	mm	110
Table top bearing ID × OD	mm	200 × 300
Diameter of worm wheel	mm	275
Ratio:		
Worm drive ratio	i =	120
Total drive ratio, with secondary drive (see page 6)	i_{tot} =	240
Table top speed (max.)	$n_{max.}$ =	12,5
Hydraulic table clamping:		
system pressure rating	bar	64
consumption	cm^3	8
pump delivery rating	l/min	max. 4
Any mounting attitude of FIBROPLAN		
Weight of FIBROPLAN (table top ∅ 340, without drive motor)	kg	approx. 230

8. Sequence of motions

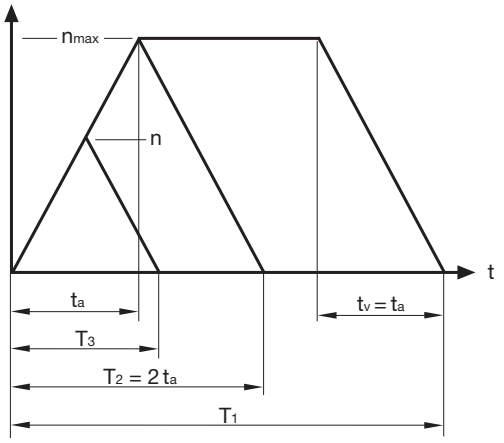

9. Switching times/moments of inertia (switching times rounded up/down)

excluding clamping process and excluding reaction times

Turning angle at table	ρ	°	10				30				45			
r.p.m. at table		min^{-1}	12,50	12,50	12,50	12,50	12,50	12,50	12,50	12,50	12,50	12,50	12,50	12,50
Moment of inertia from transport load	J	kgm^2	45	55	70	90	45	55	70	90	45	55	70	90
Angular acceleration at table	α	s^{-2}	6,55	5,25	4,20	3,15	6,55	5,25	4,20	3,15	6,55	5,25	4,20	3,15
Positioning time	T	s	0,35	0,35	0,40	0,50	0,60	0,65	0,70	0,85	0,80	0,85	0,90	1,05
Acceleration/deceleration time per	t_a, t_v	s	0,20	0,25	0,30	0,45	0,20	0,25	0,30	0,45	0,20	0,25	0,30	0,45

Turning angle at table	ρ	°	60				90				180			
r.p.m. at table		min^{-1}	12,50	12,50	12,50	12,50	12,50	12,50	12,50	12,50	12,50	12,50	12,50	12,50
Moment of inertia from transport load	J	kgm^2	45	55	70	90	45	55	70	90	45	55	70	90
Angular acceleration at table	α	s^{-2}	6,55	5,25	4,20	3,15	6,55	5,25	4,20	3,15	6,55	5,25	4,20	3,15
Positioning time	T	s	1,00	1,05	1,10	1,25	1,40	1,45	1,50	1,65	2,60	2,65	2,70	2,85
Acceleration/deceleration time per	t_a, t_v	s	0,20	0,25	0,30	0,45	0,20	0,25	0,30	0,45	0,20	0,25	0,30	0,45

1-1349 2001-1 ◦

Ordering inform. with code no. Field 1: N C 2. 0 3 . [2] . [3] . [4] . [5] . [6]

Right of alterations reserved

10. Load data

Thrust against table top face:				
table top horizontal (load + machining forces)		N	30 000	②
Radial thrust against table top		N	40 000	③
Table top loads (workpieces + fixtures):				
table top horizontal		kg	600	⑤
Mass moment of inertia of load (workpieces + fixtures), s. 9.		kgm^2	90	
Tilting moments:				
incl. moment exerted by workpieces + fixtures		Nm	6 300	⑦
Tangential moment against table top				
(with hydr. table clamping activated)		Nm	2 000	⑧
Torque limit during rotary milling		Nm	1 900	⑨
transferable by worm drive				
Maximum permissible motor torque	when $i_{tot.}$ = 120	Nm	58	
	when $i_{tot.}$ = 240	Nm	29	
Motor torque requirement for	when $i_{tot.}$ = 120	Nm	14	
positioning only	when $i_{tot.}$ = 240	Nm	7	

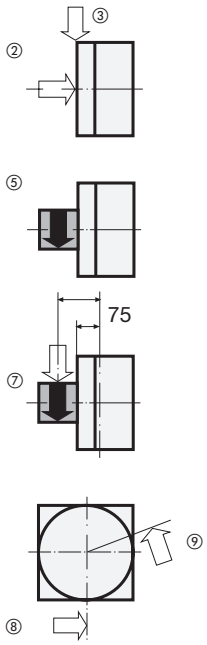

11. Installed dimensions Drawings of DXF files available to order.

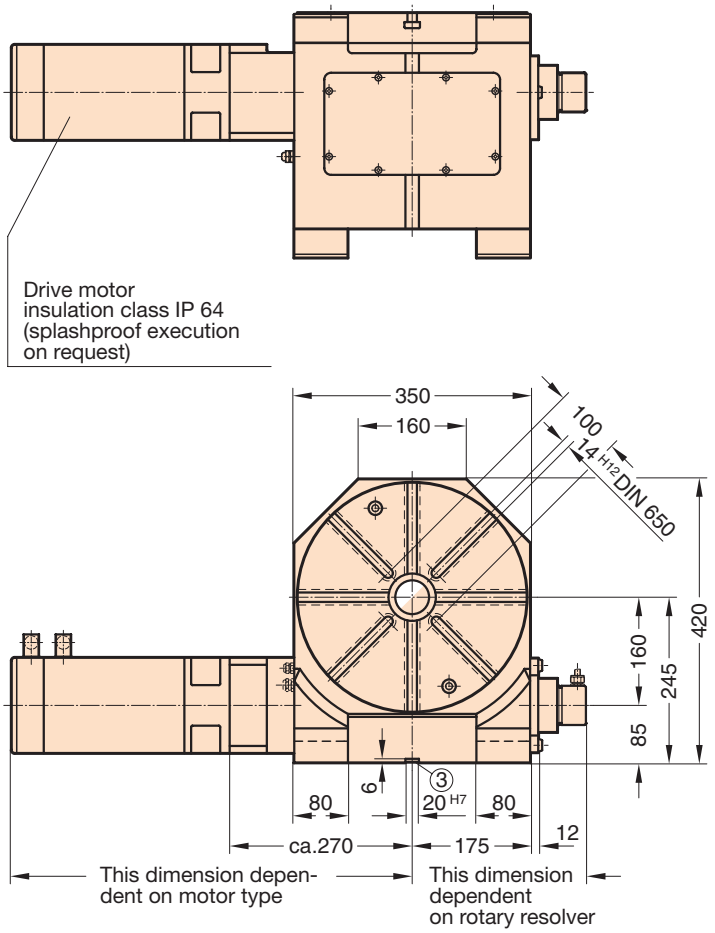

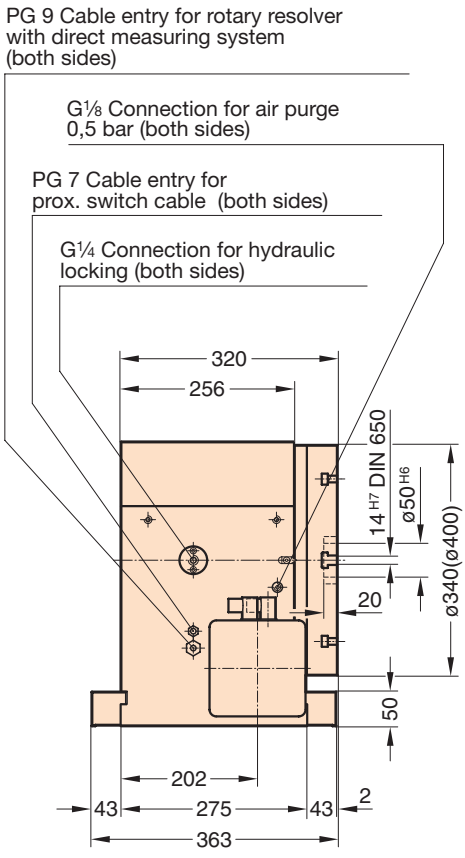

See page 8 for additional arrangements for motor and rotary resolver

Reference slot (optional) indicate reqrd. location ③ with order °

1 - 11350 - 2001 - 1 °

Right of alterations reserved

NC 2.04 Technical Data

1. Type designation

Field 1: N C 2. 0 4 .

FIBROPLAN NC2.

Size 04.

2. Table top

Field 2

dimension	∅ □ 420 mm	0420	
	∅ □ 500 mm	0500	
execution	○ round without T-slots	1	
	⊕ round with T-slots	2	
	□ square without T-slots	3	
	⊞ square with T-slots	4	

Field 3

3. Locking, of rotary table spindle

Field 4

without hydraulic table clamping	0
with hydraulic table clamping	1

4. Measuring system

Field 5

see page 8

5. Drive motor arrangement

Field 6

see page 8

7. Accuracies

Positioning accuracies:		
a) with Indirect Measuring System		
in seconds of arc	∢ s	± 10
indicator reading at ∅ 420	mm	± 0,01
b) with Direct Measuring System		
in seconds of arc	∢ s	± 3
indicator reading at ∅ 420	mm	± 0,003
Runout: centre bore		
in the rotary table	mm	0,01
Runout: table top face		
(relative to ∅ 420)	mm	0,01
Squareness: table top face to mounting face		
(relative to ∅ 420)	mm	0,02

Higher geometrical precision on request

6. Technical Data

Optional centre bore – max. ∅	mm	140
Table top bearing ID × OD	mm	260 × 385
Diameter of worm wheel	mm	347
Ratio:		
Worm drive ratio	i =	120
Total drive ratio, with secondary drive (see page 6)	i_{tot} =	240
Table top speed (max.)	$n_{max.}$ =	10
Hydraulic table clamping:		
system pressure rating	bar	64
consumption	cm^3	12
pump delivery rating	l/min	max. 6
Any mounting attitude of FIBROPLAN		
Weight of FIBROPLAN (table top ∅ 420, without drive motor)	kg	approx. 370

8. Sequence of motions

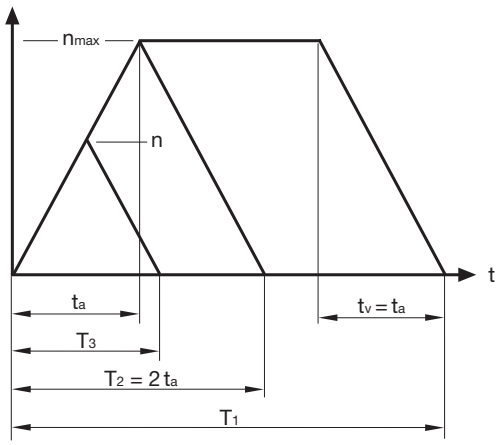

9. Switching times/moments of inertia (switching times rounded up/down)

excluding clamping process and excluding reaction times

Turning angle at table	ρ	°	10				30				45			
r.p.m. at table		min^{-1}	10,00	10,00	10,00	10,00	10,00	10,00	10,00	10,00	10,00	10,00	10,00	10,00
Moment of inertia from transport load	J	kgm^2	75	95	125	190	75	95	125	190	75	95	125	190
Angular acceleration at table	α	s^{-2}	5,25	4,20	3,15	2,10	5,25	4,20	3,15	2,10	5,25	4,20	3,15	2,10
Positioning time	T	s	0,40	0,40	0,50	0,60	0,70	0,75	0,85	1,00	0,95	1,00	1,10	1,25
Acceleration/deceleration time per	t_a, t_v	s	0,20	0,25	0,35	0,50	0,20	0,25	0,35	0,50	0,20	0,25	0,35	0,50

Turning angle at table	ρ	°	60				90				180			
r.p.m. at table		min^{-1}	10,00	10,00	10,00	10,00	10,00	10,00	10,00	10,00	10,00	10,00	10,00	10,00
Moment of inertia from transport load	J	kgm^2	75	95	125	190	75	95	125	190	75	95	125	190
Angular acceleration at table	α	s^{-2}	5,25	4,20	3,15	2,10	5,25	4,20	3,15	2,10	5,25	4,20	3,15	2,10
Positioning time	T	s	1,20	1,25	1,35	1,50	1,70	1,75	1,85	2,00	3,20	3,25	3,35	3,50
Acceleration/deceleration time per	t_a, t_v	s	0,20	0,25	0,35	0,50	0,20	0,25	0,35	0,50	0,20	0,25	0,35	0,50

1-11351 2001-1 ◦

Ordering inform. with code no. Feld 1 2 3 4 5 6: N C 2. 0 4 . . . . . .

Right of alterations reserved

10. Load data

Thrust against table top face:				
table top horizontal (load + machining forces)		N	35 000	②
Radial thrust against table top		N	50 000	③
Table top loads (workpieces + fixtures):				
table top horizontal		kg	800	⑤
Mass moment of inertia of load (workpieces + fixtures), s. 9.		kgm^2	190	
Tilting moments:				
incl. moment exerted by workpieces + fixtures		Nm	10 000	⑦
Tangential moment against table top				
(with hydr. table clamping activated)		Nm	4 000	⑧
Torque limit during rotary milling		Nm	3 500	⑨
transferable by worm drive				
Maximum permissible motor torque	when $i_{tot.}$ = 120	Nm	96	
	when $i_{tot.}$ = 240	Nm	48	
Motor torque requirement for	when $i_{tot.}$ = 120	Nm	16	
positioning only	when $i_{tot.}$ = 240	Nm	8	

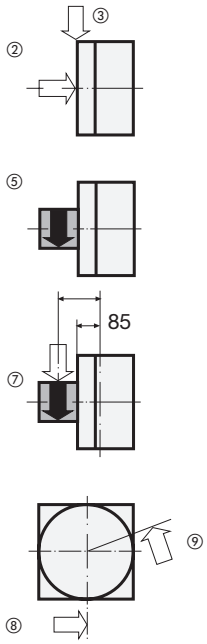

11. Installed dimensions Drawings of DXF files available to order.

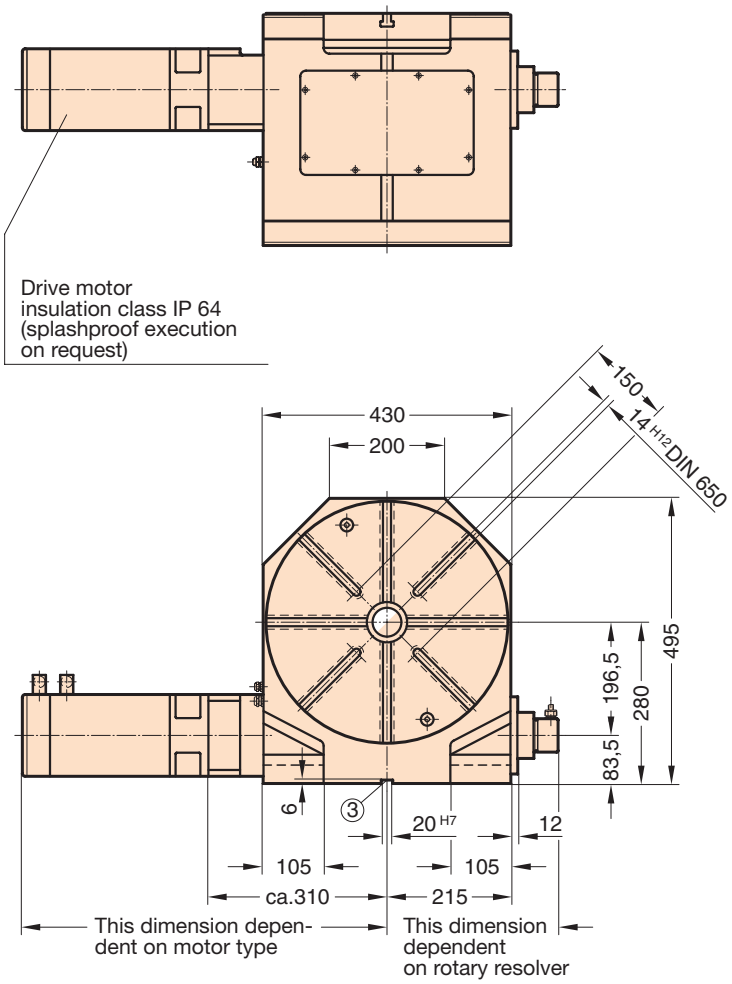

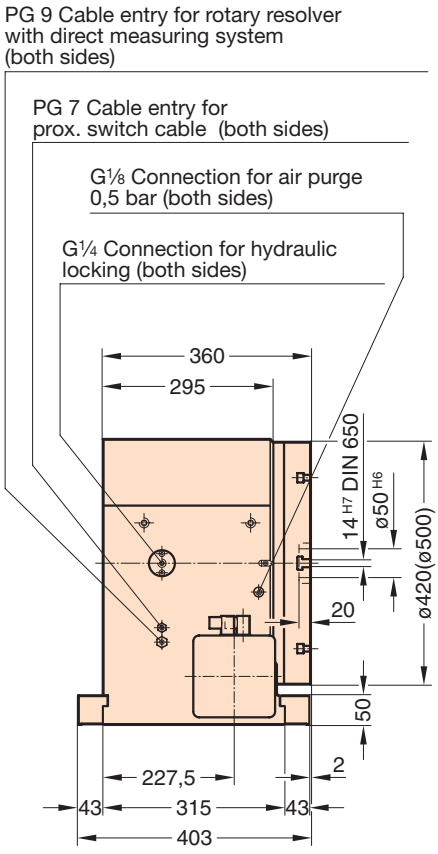

See page 8 for additional arrangements for motor and rotary resolver

Reference slot (optional) indicate reqrd. location ③ with order °

1-11352.2001-1 °

Right of alterations reserved

NC 2.05 Technical Data

1. Type designation

Field 1: N C 2. 0 5 .

FIBROPLAN NC2.

Size 05.

2. Table top

Field 2

dimension	∅ □ 520 mm	0520	
	∅ □ 630 mm	0630	
execution	○ round without T-slots	1	
	⊕ round with T-slots	2	
	□ square without T-slots	3	
	⊞ square with T-slots	4	

Field 3

3. Locking, of rotary table spindle

Field 4

without hydraulic table clamping	0
with hydraulic table clamping	1

4. Measuring system

Field 5

see page 8

5. Drive motor arrangement

Field 6

see page 8

7. Accuracies

Positioning accuracies:		
a) with Indirect Measuring System		
in seconds of arc	∢ s	± 10
indicator reading at ∅ 520	mm	± 0,013
b) with Direct Measuring System		
in seconds of arc	∢ s	± 3
indicator reading at ∅ 520	mm	± 0,004
Runout: centre bore		
in the rotary table	mm	0,01
Runout: table top face		
(relative to ∅ 520)	mm	0,012
Squareness: table top face to mounting face		
(relative to ∅ 520)	mm	0,025

Higher geometrical precision on request

6. Technical Data

Optional centre bore – max. ∅	mm	190
Table top bearing ID × OD	mm	325 × 450
Diameter of worm wheel	mm	417
Ratio:		
Worm drive ratio	i =	120
Basic version with gearwheel train	i_{tot} =	240
Table top speed (max.)	$n_{max.}$ =	10
Hydraulic table clamping:		
system pressure rating	bar	64
consumption	cm^3	16
pump delivery rating	l/min	max. 8
Any mounting attitude of FIBROPLAN		
Weight of FIBROPLAN (table top ∅ 520, without drive motor)	kg	approx. 500

8. Sequence of motions

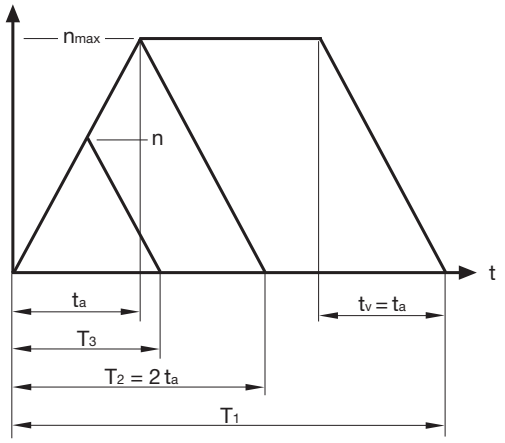

9. Switching times/moments of inertia (switching times rounded up/down)

excluding clamping process and excluding reaction times

Turning angle at table	ρ	°	10				30				45			
r.p.m. at table		min^{-1}	10,00	10,00	10,00	10,00	10,00	10,00	10,00	10,00	10,00	10,00	10,00	10,00
Moment of inertia from transport load	J	kgm^2	110	140	190	285	110	140	190	285	110	140	190	285
Angular acceleration at table	α	s^{-2}	3,50	2,80	2,10	1,40	3,50	2,80	2,10	1,40	3,50	2,80	2,10	1,40
Positioning time	T	s	0,45	0,50	0,60	0,70	0,80	0,90	1,00	1,25	1,05	1,15	1,25	1,50
Acceleration/deceleration time per	t_a, t_v	s	0,30	0,40	0,50	0,75	0,30	0,40	0,50	0,75	0,30	0,40	0,50	0,75

Turning angle at table	ρ	°	60				90				180			
r.p.m. at table		min^{-1}	10,00	10,00	10,00	10,00	10,00	10,00	10,00	10,00	10,00	10,00	10,00	10,00
Moment of inertia from transport load	J	kgm^2	110	140	190	285	110	140	190	285	110	140	190	285
Angular acceleration at table	α	s^{-2}	3,50	2,80	2,10	1,40	3,50	2,80	2,10	1,40	3,50	2,80	2,10	1,40
Positioning time	T	s	1,30	1,40	1,50	1,75	1,80	1,90	2,00	2,25	3,30	3,40	3,50	3,75
Acceleration/deceleration time per	t_a, t_v	s	0,30	0,40	0,50	0,75	0,30	0,40	0,50	0,75	0,30	0,40	0,50	0,75

1-11353 2001-1 o

Ordering inform. with code no. Field 1: N C 2. 0 5 . [2] . [3] . [4] . [5] . [6]

Right of alterations reserved

10. Load data

Thrust against table top face:				
table top horizontal (load + machining forces)		N	45 000	②
Radial thrust against table top		N	65 000	③
Table top loads (workpieces + fixtures):				
table top horizontal		kg	1 200	⑤
Mass moment of inertia of load (workpieces + fixtures), s. 9.		kgm^2	285	
Tilting moments:				
incl. moment exerted by workpieces + fixtures		Nm	16 000	⑦
Tangential moment against table top				
(with hydr. table clamping activated)		Nm	6 000	⑧
Torque limit during rotary milling		Nm	4 200	⑨
transferable by worm drive				
Maximum permissible motor torque	when $i_{tot.}$ = 240	Nm	50	
Motor torque requirement for positioning only	when $i_{tot.}$ = 240	Nm	7	

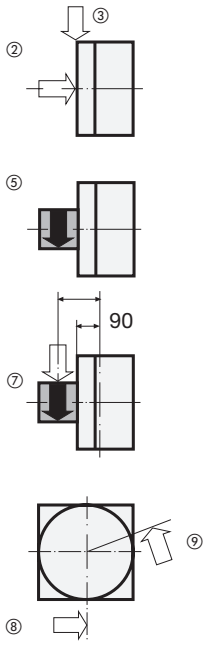

11. Installed dimensions Drawings of DXF files available to order.

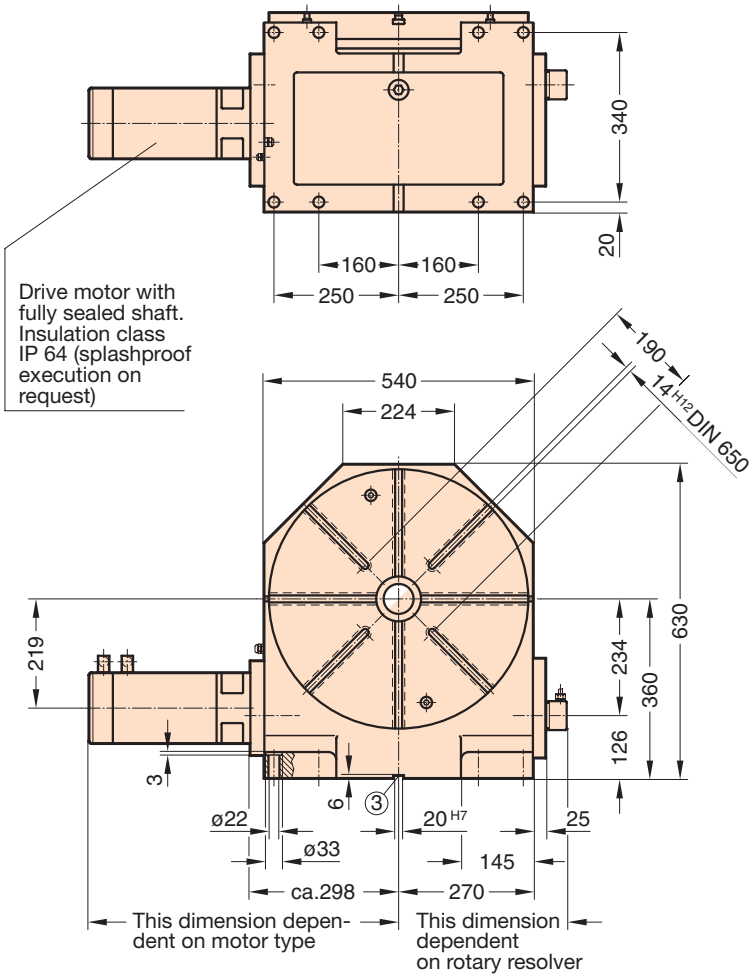

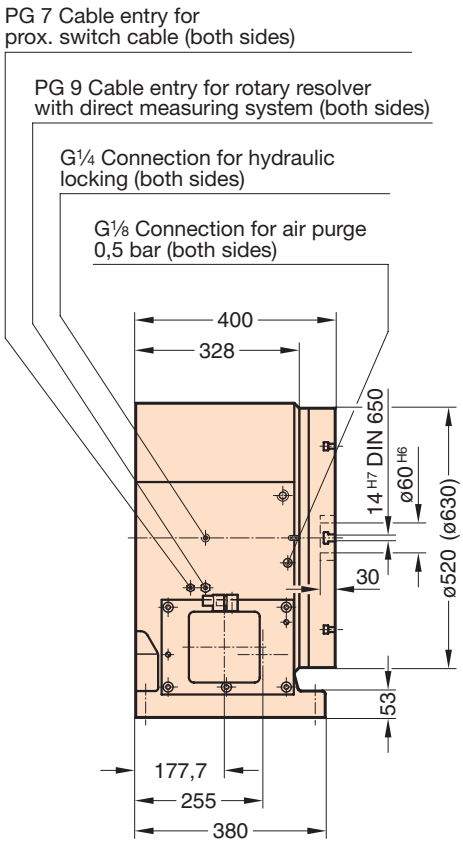

See page 8 for additional arrangements for motor and rotary resolver

Reference slot (optional) indicate reqrd. location ③ with order

1-11354-2001-1 ◦

Right of alterations reserved

NC 2.06 Technical Data

1. Type designation

Field 1: N C 2. 0 6 .

FIBROPLAN NC2.

Size 06.

2. Table top

Field 2

dimension	∅ □ 630 mm	0630	
	∅ □ 800 mm	0800	
execution	○ round without T-slots	1	
	⊕ round with T-slots	2	
	□ square without T-slots	3	
	⊞ square with T-slots	4	

Field 3

3. Locking, of rotary table spindle

Field 4

without hydraulic table clamping	0
with hydraulic table clamping	1

4. Measuring system

Field 5

see page 8

5. Drive motor arrangement

Field 6

see page 8

7. Accuracies

Positioning accuracies:		
a) with Indirect Measuring System		
in seconds of arc	∢ s	± 10
indicator reading at ∅ 630	mm	± 0,015
b) with Direct Measuring System		
in seconds of arc	∢ s	± 3
indicator reading at ∅ 630	mm	± 0,005
Runout: centre bore		
in the rotary table	mm	0,01
Runout: table top face		
(relative to ∅ 630)	mm	0,015
Squareness: table top face to mounting face		
(relative to ∅ 630)	mm	0,03

Higher geometrical precision on request

6. Technical Data

Optional centre bore – max. ∅	mm	250
Table top bearing ID × OD	mm	460 × 600
Diameter of worm wheel	mm	486
Ratio:		
Worm drive ratio	i =	144
Basic version with gearwheel train	i_{tot} =	288
Table top speed (max.)	$n_{max.}$ =	8
Hydraulic table clamping:		
system pressure rating	bar	64
consumption	cm^3	20
pump delivery rating	l/min	max. 10
Any mounting attitude of FIBROPLAN		
Weight of FIBROPLAN (table top ∅ 630, without drive motor)	kg	approx. 700

8. Sequence of motions

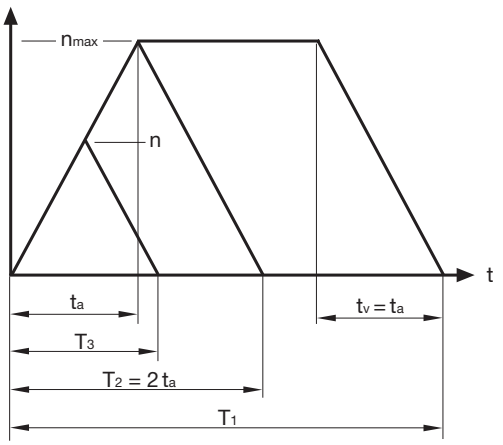

9. Switching times/moments of inertia (switching times rounded up/down)

excluding clamping process and excluding reaction times

Turning angle at table	ρ	°	10				30				45			
r.p.m. at table		min^{-1}	8,00	8,00	8,00	8,00	8,00	8,00	8,00	8,00	8,00	8,00	8,00	8,00
Moment of inertia from transport load	J	kgm^2	190	260	400	800	190	260	400	800	190	260	400	800
Angular acceleration at table	α	s^{-2}	2,80	2,10	1,40	0,70	2,80	2,10	1,40	0,70	2,80	2,10	1,40	0,70
Positioning time	T	s	0,50	0,60	0,70	1,00	0,95	1,05	1,25	1,75	1,25	1,35	1,55	2,15
Acceleration/deceleration time per	t_a, t_v	s	0,30	0,40	0,60	1,20	0,30	0,40	0,60	1,20	0,30	0,40	0,60	1,20

Turning angle at table	ρ	°	60				90				180			
r.p.m. at table		min^{-1}	8,00	8,00	8,00	8,00	8,00	8,00	8,00	8,00	8,00	8,00	8,00	8,00
Moment of inertia from transport load	J	kgm^2	190	260	400	800	190	260	400	800	190	260	400	800
Angular acceleration at table	α	s^{-2}	2,80	2,10	1,40	0,70	2,80	2,10	1,40	0,70	2,80	2,10	1,40	0,70
Positioning time	T	s	1,55	1,65	1,85	2,45	2,20	2,30	2,50	3,10	4,05	4,15	4,35	4,95
Acceleration/deceleration time per	t_a, t_v	s	0,30	0,40	0,60	1,20	0,30	0,40	0,60	1,20	0,30	0,40	0,60	1,20

1-1355 2001-1 o

Ordering inform. with code no. Field 1: N C 2. 0 6 . [ ] [ ] . [ ] . [ ] . [ ] . [ ]

Right of alterations reserved

10. Load data

Thrust against table top face:				
table top horizontal (load + machining forces)		N	75 000	②
Radial thrust against table top		N	115 000	③
Table top loads (workpieces + fixtures):				
table top horizontal		kg	2 000	⑤
Mass moment of inertia of load (workpieces + fixtures), s. 9.		kgm^2	800	
Tilting moments:				
incl. moment exerted by workpieces + fixtures		Nm	26 000	⑦
Tangential moment against table top				
(with hydr. table clamping activated)		Nm	8 000	⑧
Torque limit during rotary milling		Nm	7 000	⑨
transferable by worm drive				
Maximum permissible motor torque	when $i_{tot.}$ = 288	Nm	74	
Motor torque requirement for positioning only	when $i_{tot.}$ = 288	Nm	9,5	

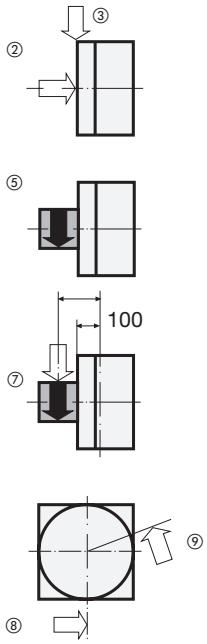

11. Installed dimensions Drawings of DXF files available to order.

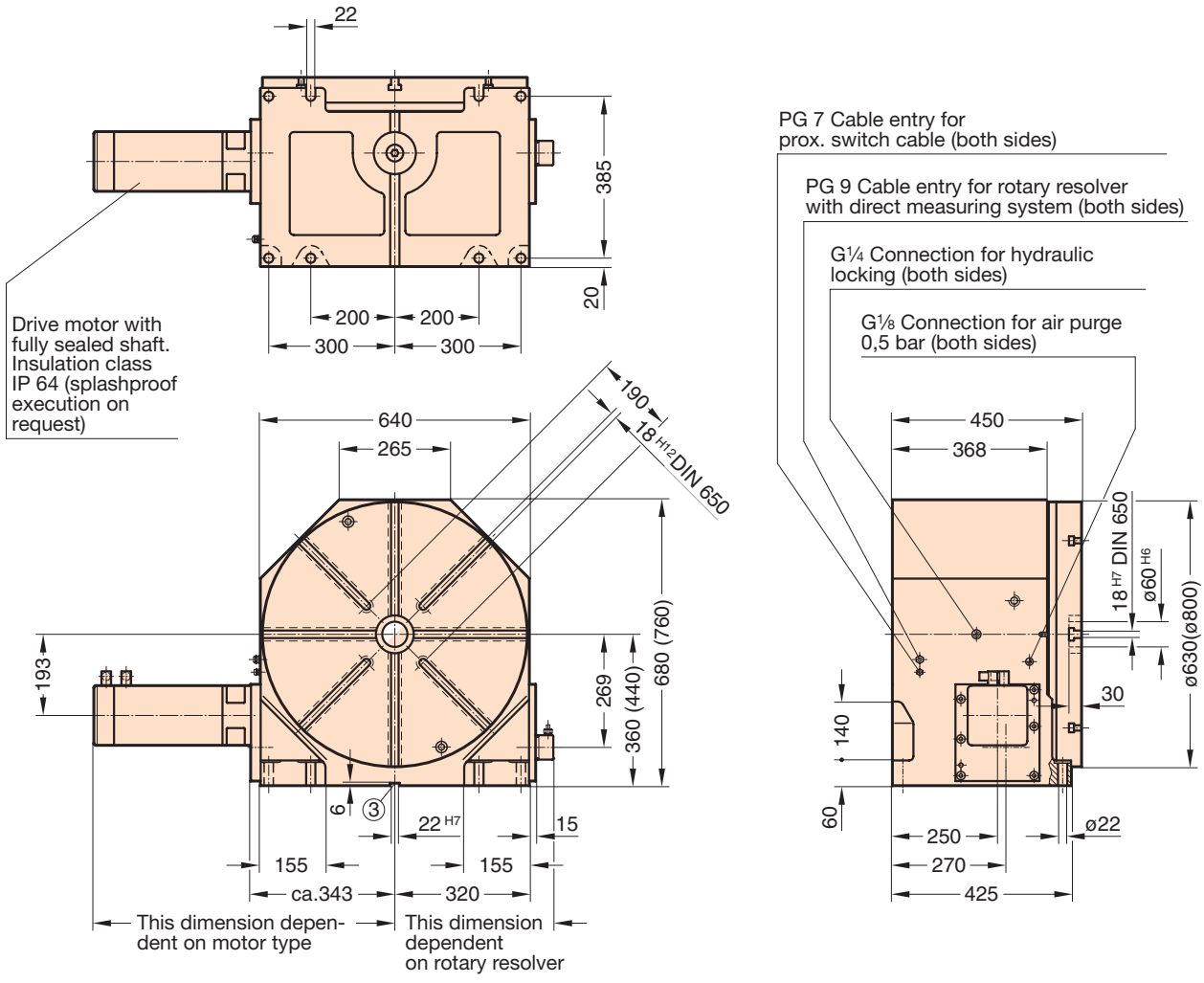

See page 8 for additional arrangements for motor and rotary resolver

Reference slot (optional) indicate reqrd. location ③ with order

1 - 11356 .2001 - 1 ◦

Right of alterations reserved

NC 2.07 Technical Data

1. Type designation

Field 1 NC2.07.

FIBROPLAN NC2.

Size 07.

2. Table top

Field 2

dimension	∅ □ 800	mm	0800	
	∅ □ 1 000	mm	1000	
execution	○ round without T-slots			1
	⊕ round with T-slots			2
	□ square without T-slots			3
	⊞ square with T-slots			4

Field 3

3. Locking, of rotary table spindle

Field 4

without hydraulic table clamping	0
with hydraulic table clamping	1

4. Measuring system

Field 5

see page 8

5. Drive motor arrangement

Field 6

see page 8

7. Accuracies

Positioning accuracies:		
a) with Indirect Measuring System		
in seconds of arc	∢ s	± 10
indicator reading at ∅ 800	mm	± 0,02
b) with Direct Measuring System		
in seconds of arc	∢ s	± 3
indicator reading at ∅ 800	mm	± 0,006
Runout: centre bore		
in the rotary table	mm	0,01
Runout: table top face		
(relative to ∅ 800)	mm	0,015
Squareness: table top face to		
mounting face		
(relative to ∅ 800)	mm	0,03

Higher geometrical precision on request

6. Technical Data

Optional centre bore – max. ∅	mm	350
Table top bearing ID × OD	mm	580 × 750
Diameter of worm wheel	mm	562
Ratio:		
Worm drive ratio	i =	180
Basic version with gearwheel train	i_{tot} =	360
Table top speed (max.)	$n_{max.}$ =	6
Hydraulic table clamping:		
system pressure rating	bar	64
consumption	cm^3	25
pump delivery rating	l/min	max. 12
Any mounting attitude of FIBROPLAN		
Weight of FIBROPLAN		
(table top ∅ 800, without drive motor)	kg	approx. 1 250

8. Sequence of motions

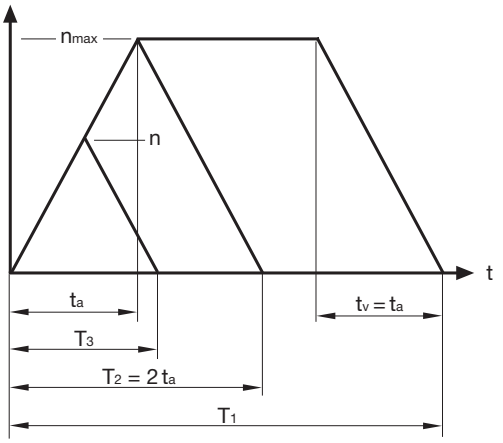

9. Switching times/moments of inertia (switching times rounded up/down)

excluding clamping process and excluding reaction times

Turning angle at table	ρ	°	10				30				45			
r.p.m. at table		min^{-1}	6,00	6,00	6,00	6,00	6,00	6,00	6,00	6,00	6,00	6,00	6,00	6,00
Moment of inertia from transport load	J	kgm^2	220	310	500	1 000	220	310	500	1 000	220	310	500	1 000
Angular acceleration at table	α	s^{-2}	2,10	1,60	1,05	0,55	2,10	1,60	1,05	0,55	2,10	1,60	1,05	0,55
Positioning time	T	s	0,60	0,70	0,85	1,15	1,15	1,25	1,45	2,00	1,55	1,65	1,85	2,45
Acceleration/deceleration time per	t_a, t_v	s	0,30	0,40	0,60	1,20	0,30	0,40	0,60	1,20	0,30	0,40	0,60	1,20

Turning angle at table	ρ	°	60				90				180			
r.p.m. at table		min^{-1}	6,00	6,00	6,00	6,00	6,00	6,00	6,00	6,00	6,00	6,00	6,00	6,00
Moment of inertia from transport load	J	kgm^2	220	310	500	1 000	220	310	500	1 000	220	310	500	1 000
Angular acceleration at table	α	s^{-2}	2,10	1,60	1,05	0,55	2,10	1,60	1,05	0,55	2,10	1,60	1,05	0,55
Positioning time	T	s	2,00	2,10	2,30	2,85	2,80	2,90	3,10	3,70	5,30	5,40	5,60	6,20
Acceleration/deceleration time per	t_a, t_v	s	0,30	0,40	0,60	1,20	0,30	0,40	0,60	1,20	0,30	0,40	0,60	1,20

1 · 11357 · 2001 · 1 ◦

Ordering inform. with code no. NC2.07. Field 1 . 2 . 3 . 4 . 5 . 6

Right of alterations reserved

10. Load data

Thrust against table top face:				
table top horizontal (load + machining forces)		N	100 000	②
Radial thrust against table top		N	140 000	③
Table top loads (workpieces + fixtures):				
table top horizontal		kg	3 000	⑤
Mass moment of inertia of load (workpieces + fixtures), s. 9.		kgm^2	1 000	
Tilting moments:				
incl. moment exerted by workpieces + fixtures		Nm	32 000	⑦
Tangential moment against table top				
(with hydr. table clamping activated)		Nm	14 000	⑧
Torque limit during rotary milling		Nm	7 000	⑨
transferable by worm drive				
Maximum permissible motor torque	when $i_{tot.}$ = 360	Nm	55	
Motor torque requirement for positioning only	when $i_{tot.}$ = 360	Nm	10	

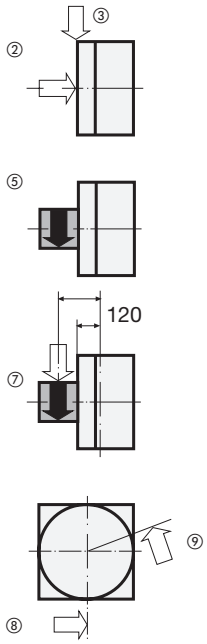

11. Installed dimensions Drawings of DXF files available to order.

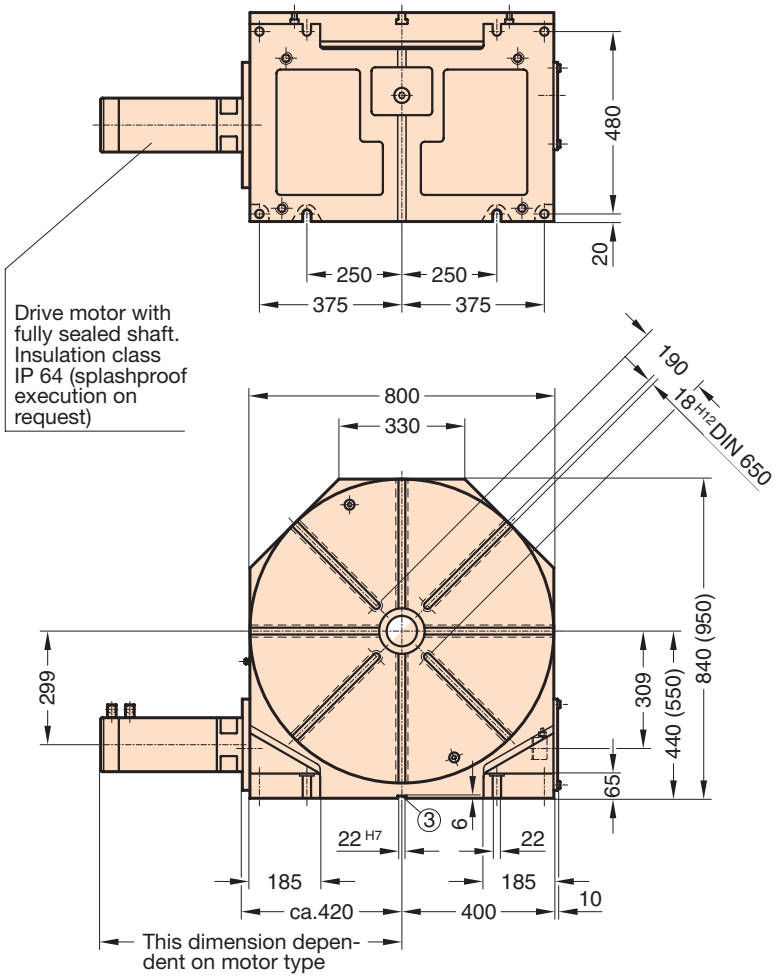

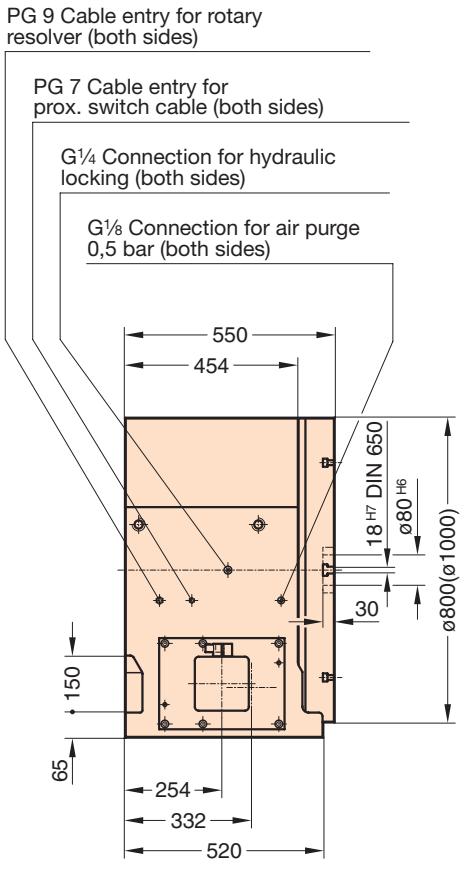

See page 8 for additional arrangements for motor and rotary resolver

Reference slot (optional) indicate reqrd. location ③ with order

1 - 11358 .2001 - 1 ◦

Right of alterations reserved

NC 2.08 Technical Data

1. Type designation

Field 1: N C 2. 0 8 .

FIBROPLAN NC2.

Size 08.

2. Table top

Field 2

dimension	∅ □ 1 000 mm	1000	
	∅ □ 1 250 mm	1250	
execution	○ round without T-slots		1
	⊕ round with T-slots		2
	□ square without T-slots		3
	⊞ square with T-slots		4

Field 3

3. Locking, of rotary table spindle

Field 4

without hydraulic table clamping	0
with hydraulic table clamping	1

4. Measuring system

Field 5

see page 8

5. Drive motor arrangement

Field 6

see page 8

7. Accuracies

Positioning accuracies:		
a) with Indirect Measuring System		
in seconds of arc	∢ s	± 10
indicator reading at ∅ 1 000	mm	± 0,024
b) with Direct Measuring System		
in seconds of arc	∢ s	± 3
indicator reading at ∅ 1 000	mm	± 0,007
Runout: centre bore		
in the rotary table	mm	0,01
Runout: table top face		
(relative to ∅ 1 000)	mm	0,02
Squareness: table top face to mounting face		
(relative to ∅ 1 000)	mm	0,04

Higher geometrical precision on request

6. Technical Data

Optional centre bore – max. ∅	mm	460
Table top bearing ID × OD	mm	650 × 870
Diameter of worm wheel	mm	805
Ratio:		
Worm drive ratio	i =	240
Basic version with gearwheel train	i_{tot} =	480
Table top speed (max.)	$n_{max.}$ =	6
Hydraulic table clamping:		
system pressure rating	bar	64
consumption	cm^3	30
pump delivery rating	l/min	max. 14
Any mounting attitude of FIBROPLAN		
Weight of FIBROPLAN (table top ∅ 1 000, without drive motor)	kg	approx. 2 300

8. Sequence of motions

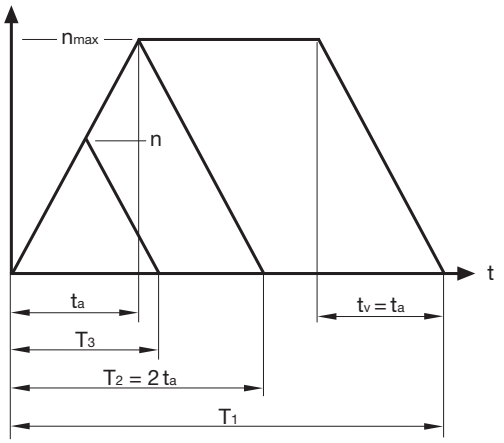

9. Switching times/moments of inertia (switching times rounded up/down)

excluding clamping process and excluding reaction times

Turning angle at table	ρ	°	10				30				45			
r.p.m. at table		min^{-1}	6,00	6,00	6,00	6,00	6,00	6,00	6,00	6,00	6,00	6,00	6,00	6,00
Moment of inertia from transport load	J	kgm^2	750	1 100	1 750	3 600	750	1 100	1 750	3 600	750	1 100	1 750	3 600
Angular acceleration at table	α	s^{-2}	1,60	1,20	0,80	0,40	1,60	1,20	0,80	0,40	1,60	1,20	0,80	0,40
Positioning time	T	s	0,70	0,80	0,95	1,35	1,25	1,40	1,65	2,35	1,65	1,80	2,05	2,85
Acceleration/deceleration time per	t_a, t_v	s	0,40	0,55	0,80	1,60	0,40	0,55	0,80	1,60	0,40	0,55	0,80	1,60

Turning angle at table	ρ	°	60				90				180			
r.p.m. at table		min^{-1}	6,00	6,00	6,00	6,00	6,00	6,00	6,00	6,00	6,00	6,00	6,00	6,00
Moment of inertia from transport load	J	kgm^2	750	1 100	1 750	3 600	750	1 100	1 750	3 600	750	1 100	1 750	3 600
Angular acceleration at table	α	s^{-2}	1,60	1,20	0,80	0,40	1,60	1,20	0,80	0,40	1,60	1,20	0,80	0,39
Positioning time	T	s	2,10	2,20	2,45	3,30	2,90	3,05	3,30	4,10	5,40	5,55	5,80	6,60
Acceleration/deceleration time per	t_a, t_v	s	0,40	0,55	0,80	1,60	0,40	0,55	0,80	1,60	0,40	0,55	0,80	1,60

1-11359 2001-1 ◦

Ordering inform. with code no. Field 1: N C 2. 0 8 . [ ] . [ ] . [ ] . [ ] . [ ]

Right of alterations reserved

10. Load data

Thrust against table top face:				
table top horizontal (load + machining forces)		N	120 000	②
Radial thrust against table top		N	250 000	③
Table top loads (workpieces + fixtures):				
table top horizontal		kg	6 000	⑤
Mass moment of inertia of load (workpieces + fixtures), s. 9.		kgm^2	3 600	
Tilting moments:				
incl. moment exerted by workpieces + fixtures		Nm	48 000	⑦
Tangential moment against table top				
(with hydr. table clamping activated)		Nm	25 000	⑧
Torque limit during rotary milling		Nm	14 000	⑨
transferable by worm drive				
Maximum permissible motor torque	when $i_{tot.}$ = 480	Nm	90	
Motor torque requirement for				
positioning only	when $i_{tot.}$ = 480	Nm	15	

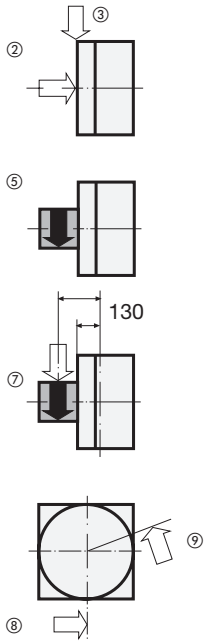

11. Installed dimensions Drawings of DXF files available to order.

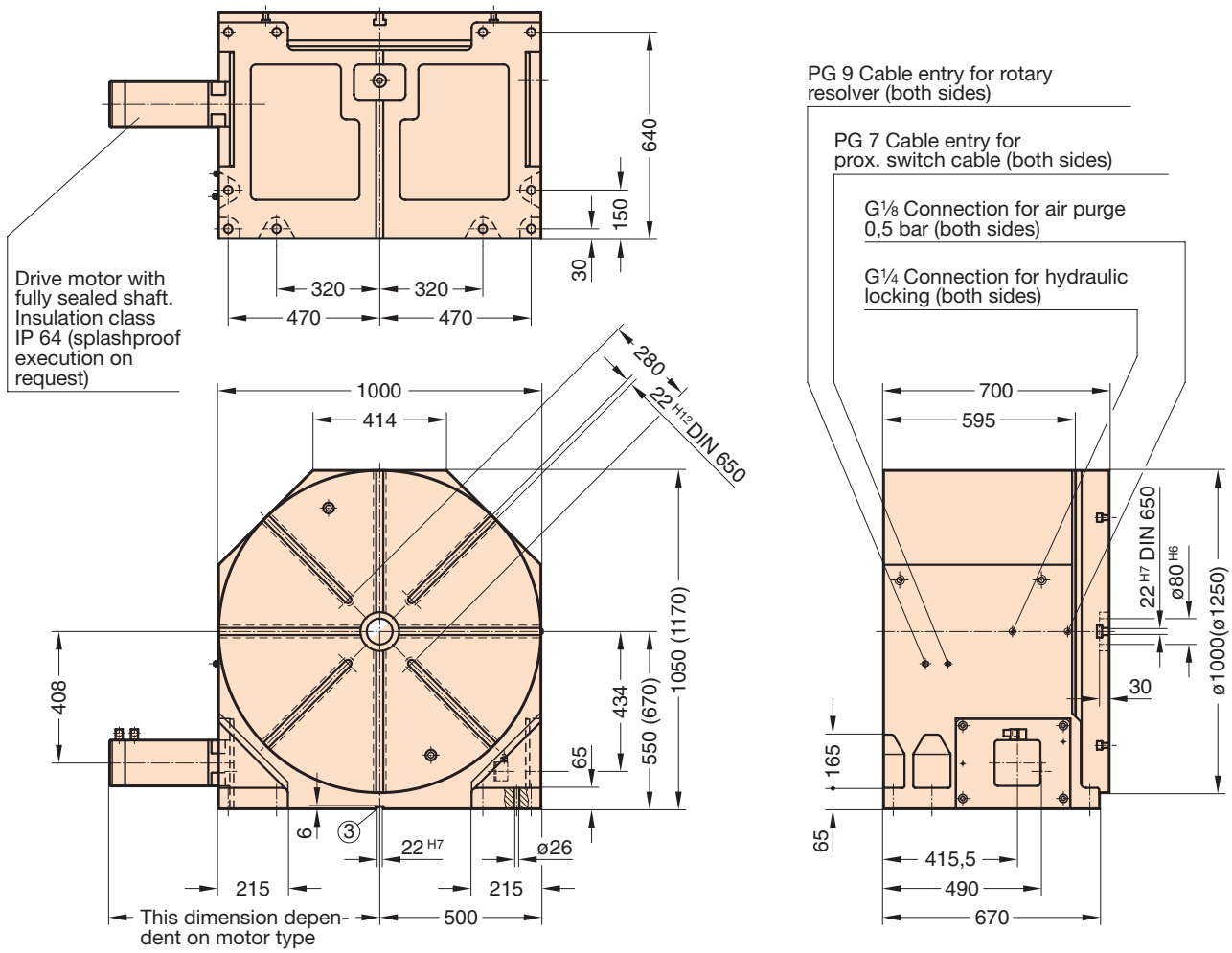

See page 8 for additional arrangements for motor and rotary resolver

Reference slot (optional) indicate reqrd. location ③ with order

1 · 11360 · 2001 · 1 ◦

Right of alterations reserved

NC 2.09 Technical Data

1. Type designation

Field 1: N C 2. 0 9 .

FIBROPLAN NC2.

Size 09.

2. Table top

Field 2

dimension	∅ □ 1 250 mm	1250	
	∅ □ 1 500 mm	1500	
execution	○ round without T-slots		1
	⊕ round with T-slots		2
	□ square without T-slots		3
	⊞ square with T-slots		4

Field 3

3. Locking, of rotary table spindle

Field 4

without hydraulic table clamping	0
with hydraulic table clamping	1

4. Measuring system

Field 5

see page 8

5. Drive motor arrangement

Field 6

see page 8

7. Accuracies

Positioning accuracies:		
a) with Indirect Measuring System		
in seconds of arc	∢ s	± 10
indicator reading at ∅ 1 250	mm	± 0,03
b) with Direct Measuring System		
in seconds of arc	∢ s	± 3
indicator reading at ∅ 1 250	mm	± 0,009
Runout: centre bore		
in the rotary table	mm	0,01
Runout: table top face		
(relative to ∅ 1 250)	mm	0,02
Squareness: table top face to mounting face		
(relative to ∅ 1 250)	mm	0,04

Higher geometrical precision on request

6. Technical Data

Optional centre bore – max. ∅	mm	600
Table top bearing ID × OD	mm	850 × 1 095
Diameter of worm wheel	mm	1 020
Ratio:		
Worm drive ratio	i =	320
Basic version with gearwheel train	i_{tot} =	480
Table top speed (max.)	$n_{max.}$ =	4,2
Hydraulic table clamping:		
system pressure rating	bar	64
consumption	cm^3	40
pump delivery rating	l/min	max. 20
Any mounting attitude of FIBROPLAN		
Weight of FIBROPLAN (table top ∅ 1 250, without drive motor)	kg	approx. 4 000

8. Sequence of motions

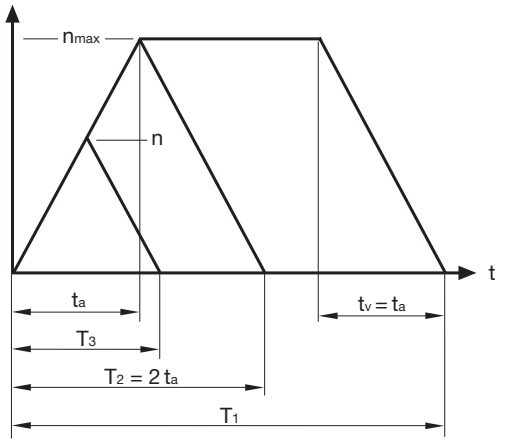

9. Switching times/moments of inertia (switching times rounded up/down)

excluding clamping process and excluding reaction times

Turning angle at table	ρ	°	10				30				45			
r.p.m. at table		min^{-1}	4,20	4,20	4,20	4,20	4,20	4,20	4,20	4,20	4,20	4,20	4,20	4,20
Moment of inertia from transport load	J	kgm^2	1 500	2 250	3 500	7 500	1 500	2 250	3 500	7 500	1 500	2 250	3 500	7 500
Angular acceleration at table	α	s^{-2}	0,90	0,65	0,45	0,20	0,90	0,65	0,45	0,20	0,90	0,65	0,45	0,20
Positioning time	T	s	0,90	1,05	1,30	1,85	1,70	1,90	2,25	3,15	2,30	2,50	2,85	3,90
Acceleration/deceleration time per	t_a, t_v	s	0,50	0,70	1,05	2,10	0,50	0,70	1,05	2,10	0,50	0,70	1,05	2,10

Turning angle at table	ρ	°	60				90				180			
r.p.m. at table		min^{-1}	4,20	4,20	4,20	4,20	4,20	4,20	4,20	4,20	4,20	4,20	4,20	4,20
Moment of inertia from transport load	J	kgm^2	1 500	2 250	3 500	7 500	1 500	2 250	3 500	7 500	1 500	2 250	3 500	7 500
Angular acceleration at table	α	s^{-2}	0,90	0,65	0,45	0,20	0,90	0,65	0,45	0,20	0,90	0,65	0,45	0,20
Positioning time	T	s	2,90	3,10	3,45	4,50	4,10	4,30	4,65	5,70	7,65	7,85	8,20	9,25
Acceleration/deceleration time per	t_a, t_v	s	0,50	0,70	1,05	2,10	0,50	0,70	1,05	2,10	0,50	0,70	1,05	2,10

1-11361 2001-1 ◦

Ordering inform. with code no. Field 1: N C 2. 0 9 . [ ] 2 . [ ] 3 . [ ] 4 . [ ] 5 . [ ] 6

Right of alterations reserved

10. Load data

Thrust against table top face:				
table top horizontal (load + machining forces)		N	160 000	②
Radial thrust against table top		N	300 000	③
Table top loads (workpieces + fixtures):				
table top horizontal		kg	8 000	⑤
Mass moment of inertia of load (workpieces + fixtures), s. 9.		kgm^2	7 500	
Tilting moments:				
incl. moment exerted by workpieces + fixtures		Nm	60 000	⑦
Tangential moment against table top				
(with hydr. table clamping activated)		Nm	32 000	⑧
Torque limit during rotary milling		Nm	17 000	⑨
transferable by worm drive				
Maximum permissible motor torque	when $i_{tot.}$ = 480	Nm	110	
Motor torque requirement for positioning only	when $i_{tot.}$ = 480	Nm	20	

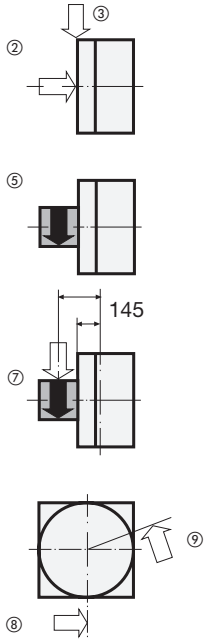

11. Installed dimensions Drawings of DXF files available to order.

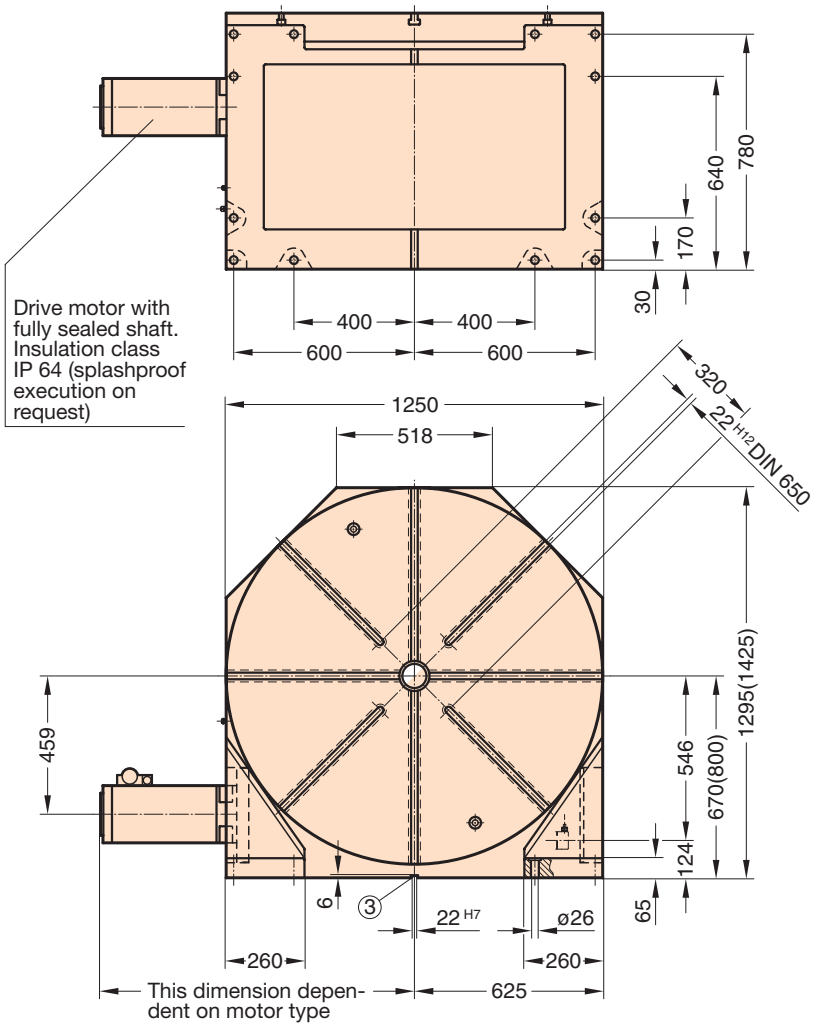

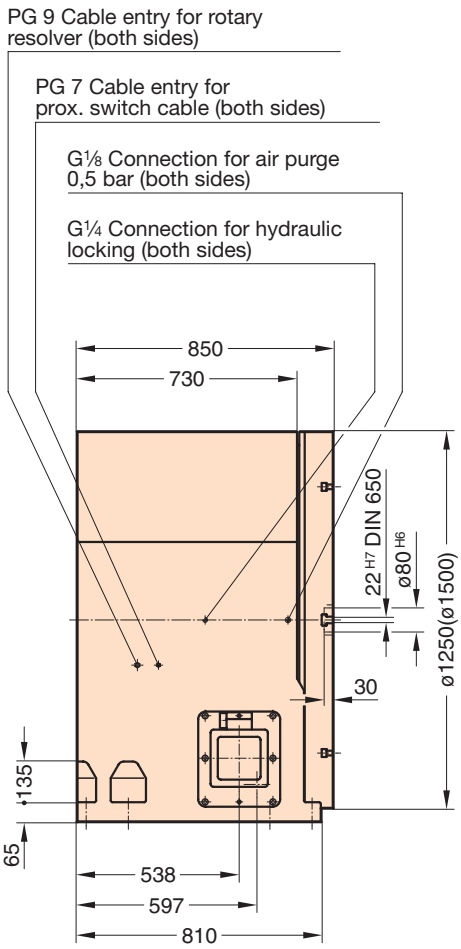

See page 8 for additional arrangements for motor and rotary resolver

Reference slot (optional) indicate reqrd. location ③ with order

1 - 11362 2001 - 1 o

Right of alterations reserved

NC 2.10 Technical Data

1. Type designation

FIBROPLAN NC2.

Size 10.

Field 1: N C 2. 1 0 .

2. Table top

			Field 2
dimension	∅ □ 1600	mm	1600 .
execution	○ round without T-slots		1
	⊕ round with T-slots		2
	□ square without T-slots		3
	⊞ square with T-slots		4

Field 3: .

3. Locking, of rotary table spindle

without hydraulic table clamping	0
with hydraulic table clamping	1

Field 4: .

4. Measuring system

see page 8

Field 5: .

5. Drive motor arrangement

see page 8

Field 6:

7. Accuracies

Positioning accuracies:		
a) with Indirect Measuring System		
in seconds of arc	∢ s	± 10
indicator reading at ∅ 1600	mm	± 0,039
b) with Direct Measuring System		
in seconds of arc	∢ s	± 3
indicator reading at ∅ 1600	mm	± 0,012
Runout: centre bore		
in the rotary table	mm	0,01
Runout: table top face		
(relative to ∅ 1600)	mm	0,025
Squareness: table top face to mounting face		
(relative to ∅ 1600)	mm	0,05

Higher geometrical precision on request

6. Technical Data

Optional centre bore – max. ∅	mm	750
Table top bearing ID × OD	mm	1030 × 1300
Diameter of worm wheel	mm	1215
Ratio:		
Worm drive ratio	i =	320
Basic version with gearwheel train	i_{tot} =	480
Table top speed (max.)	$n_{max.}$ =	3,1
Hydraulic table clamping:		
system pressure rating	bar	64
consumption	cm^3	50
pump delivery rating	l/min	max. 24
Any mounting attitude of FIBROPLAN		
Weight of FIBROPLAN (table top ∅ 1600, without drive motor)	kg	approx. 5500

8. Sequence of motions

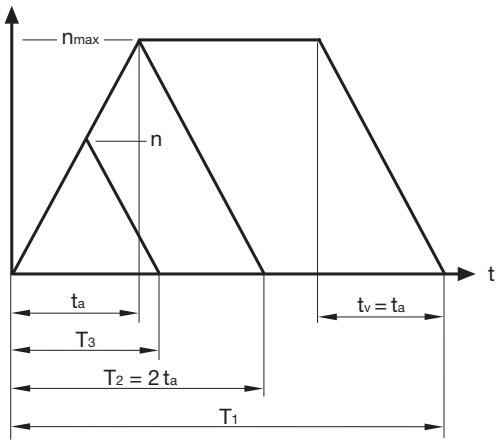

9. Switching times/moments of inertia (switching times rounded up/down)

excluding clamping process and excluding reaction times

Turning angle at table	ρ	°	10				30				45			
r.p.m. at table		min^{-1}	3,10	3,10	3,10	3,10	3,10	3,10	3,10	3,10	3,10	3,10	3,10	3,10
Moment of inertia from transport load	J	kgm^2	3000	5000	7000	12000	3000	5000	7000	12000	3000	5000	7000	12000
Angular acceleration at table	α	s^{-2}	0,65	0,45	0,30	0,20	0,65	0,45	0,30	0,20	0,65	0,45	0,30	0,20
Positioning time	T	s	1,05	1,25	1,50	1,85	2,10	2,35	2,65	3,15	2,95	3,15	3,50	4,00
Acceleration/deceleration time per	t_a, t_v	s	0,50	0,70	1,05	1,55	0,50	0,70	1,05	1,55	0,50	0,70	1,05	1,55

Turning angle at table	ρ	°	60				90				180			
r.p.m. at table		min^{-1}	3,10	3,10	3,10	3,10	3,10	3,10	3,10	3,10	3,10	3,10	3,10	3,10
Moment of inertia from transport load	J	kgm^2	3000	5000	7000	12000	3000	5000	7000	12000	3000	5000	7000	12000
Angular acceleration at table	α	s^{-2}	0,65	0,45	0,30	0,20	0,65	0,45	0,30	0,20	0,65	0,45	0,30	0,20
Positioning time	T	s	3,75	3,95	4,30	4,80	5,35	5,55	5,90	6,40	10,20	10,40	10,75	11,25
Acceleration/deceleration time per	t_a, t_v	s	0,50	0,70	1,05	1,55	0,50	0,70	1,05	1,55	0,50	0,70	1,05	1,55

1-11363 2001-1 ◦

Ordering inform. with code no. Field 1: N C 2. 1 0 . . . . . .

Right of alterations reserved

10. Load data

Thrust against table top face:				
table top horizontal (load + machining forces)		N	200 000	②
Radial thrust against table top		N	400 000	③
Table top loads (workpieces + fixtures):				
table top horizontal		kg	12 000	⑤
Mass moment of inertia of load (workpieces + fixtures), s. 9.		kgm^2	12 000	
Tilting moments:				
incl. moment exerted by workpieces + fixtures		Nm	110 000	⑦
Tangential moment against table top				
(with hydr. table clamping activated)		Nm	40 000	⑧
Torque limit during rotary milling		Nm	24 000	⑨
transferable by worm drive				
Maximum permissible motor torque	when $i_{tot.}$ = 480	Nm	145	
Motor torque requirement for positioning only	when $i_{tot.}$ = 480	Nm	27	

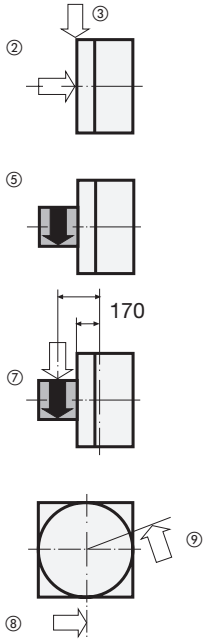

11. Installed dimensions Drawings of DXF files available to order.

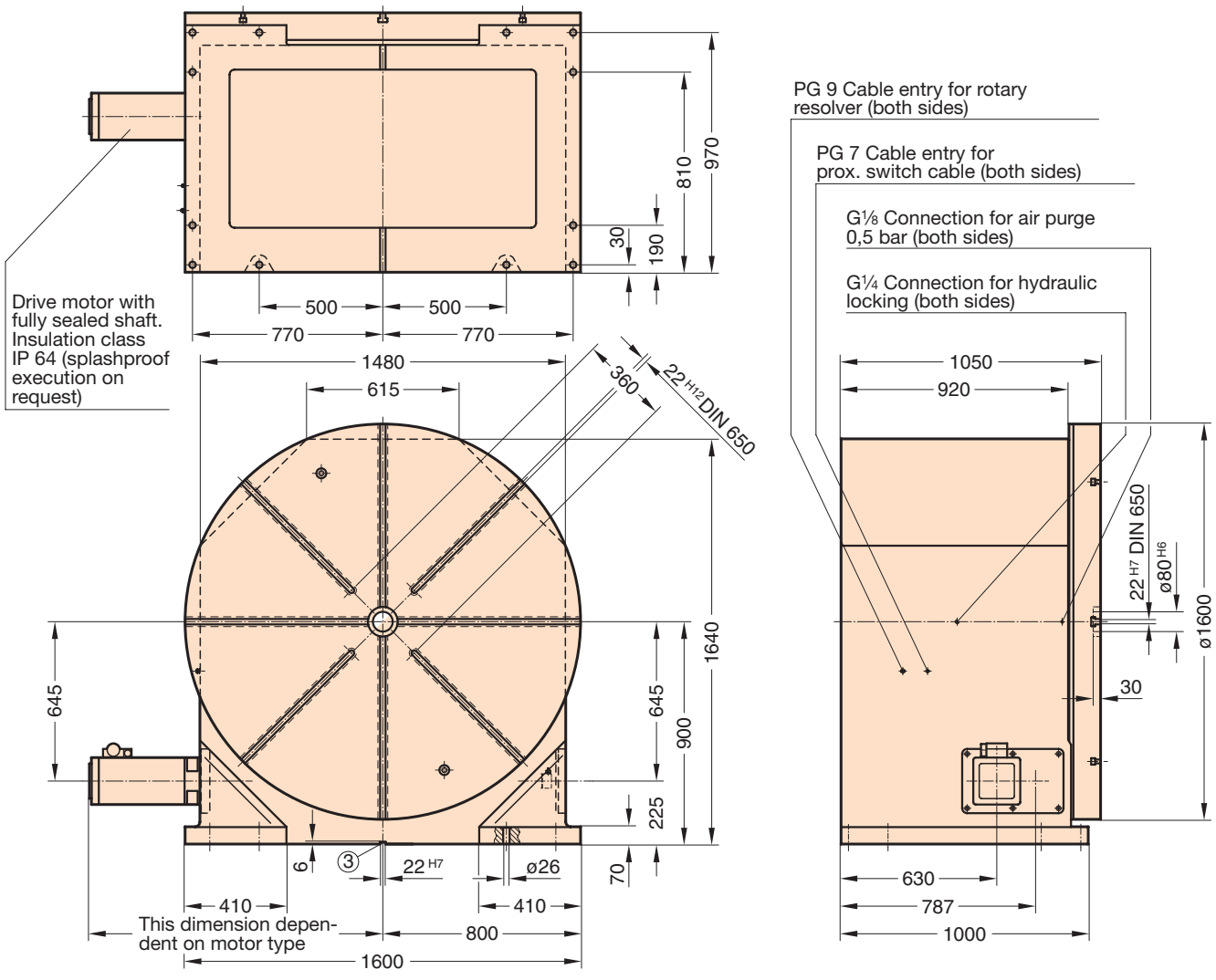

See page 8 for additional arrangements for motor and rotary resolver

Reference slot (optional) indicate reqrd. location ③ with order

1 - 11364 - 2001 - 1 ○

Right of alterations reserved

FIBROPLAN®-
combination models with multiple axes

One Swivel Axis with Four Rotational Axes

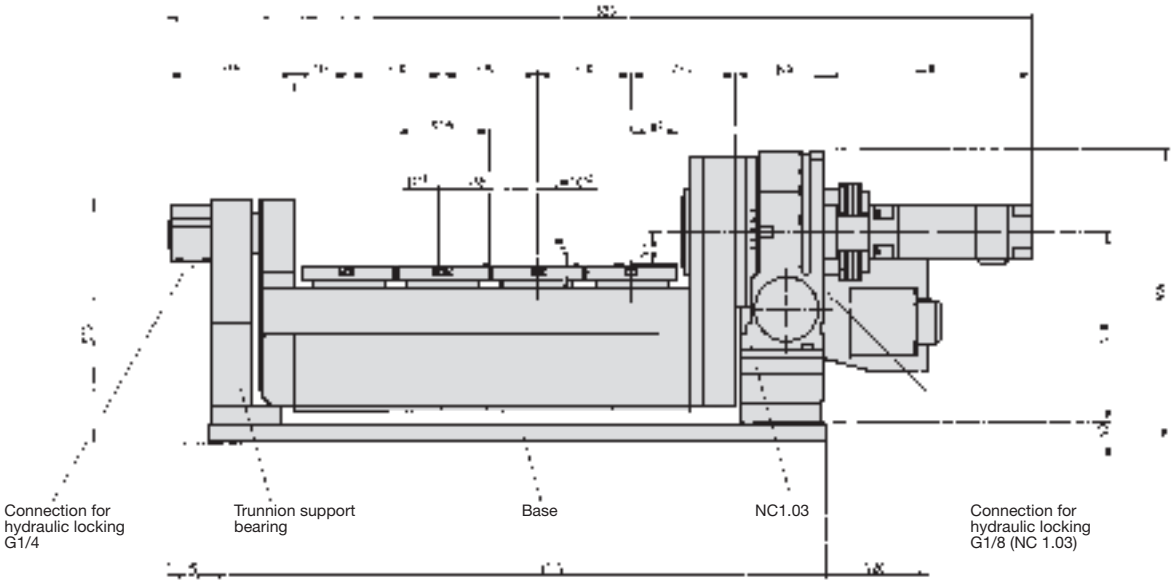

FIBROPLAN –
combination models with multiple axes.

Applications

- operations with simultaneous tools control on multiple machining spindles
- machining of up to 5 component-sides in one clamping
- machining in complex angular positions
- machining of components with complex shapes, such as turbine parts, fan blades etc.

Technical Data/information on executions, sizes etc. on request.

1-11385 2001.1 o

Right of alterations reserved

One Swivel Axis with One Rotational Axis

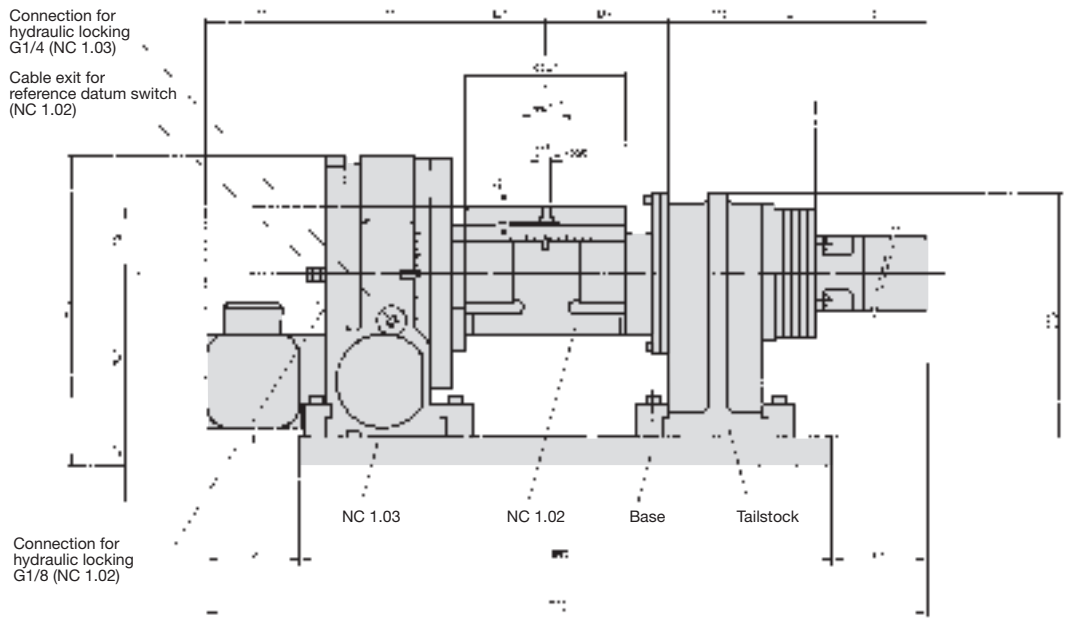

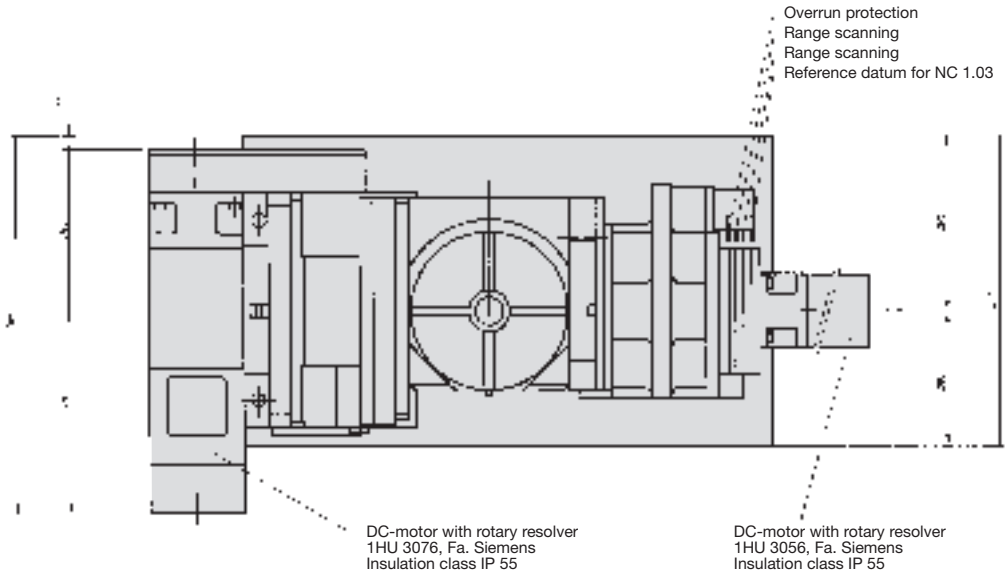

1-11366.2001-1 o

Right of alterations reserved

FIBROPLAN®-
combination models with multiple axes

One Swivel Axis with One Rotational Axis

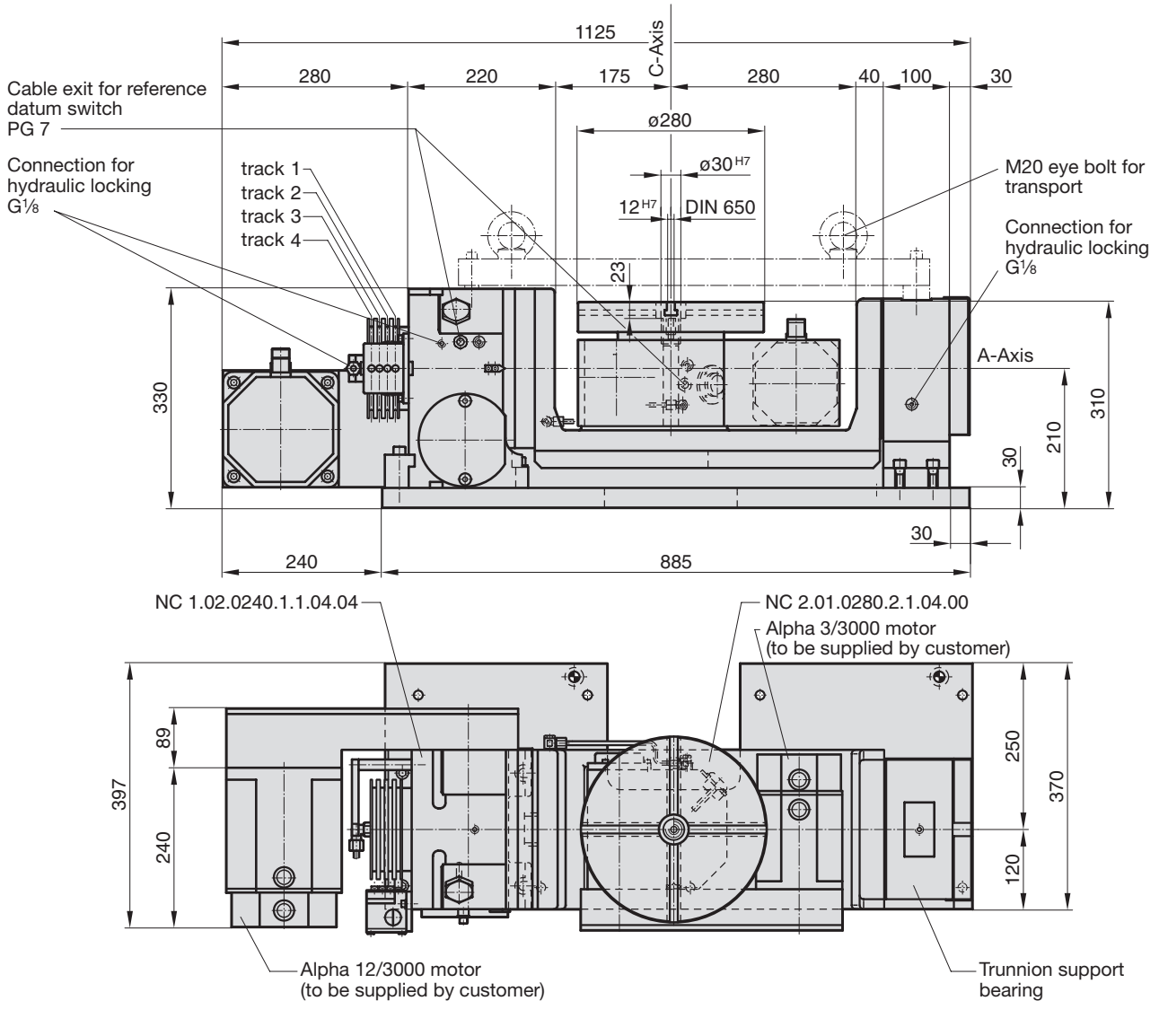

1-11367 2001.1 ◦

Right of alterations reserved

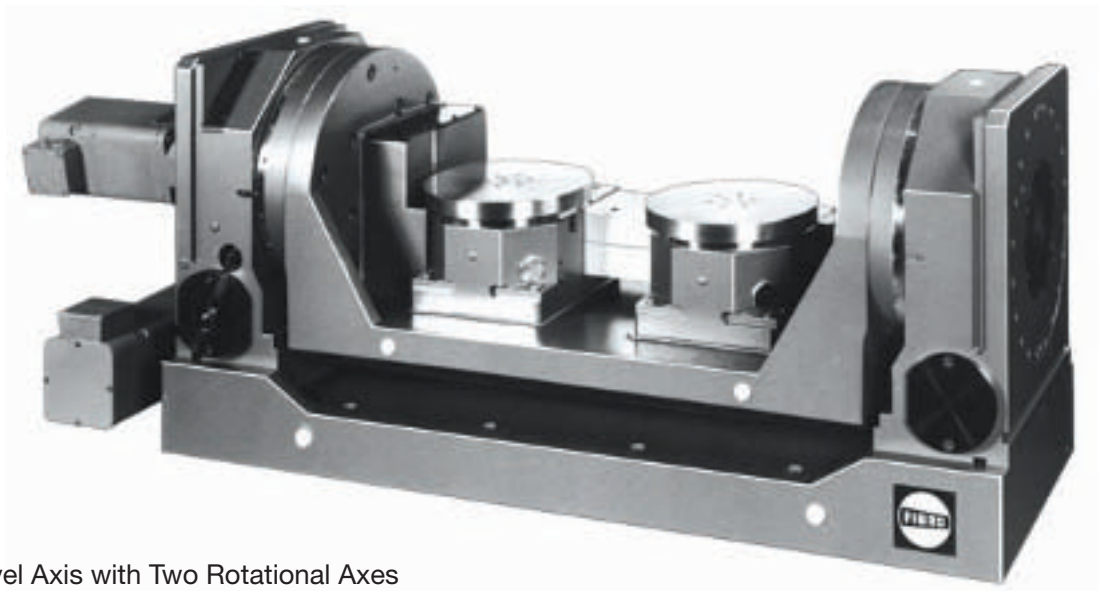

One Swivel Axis with Two Rotational Axes

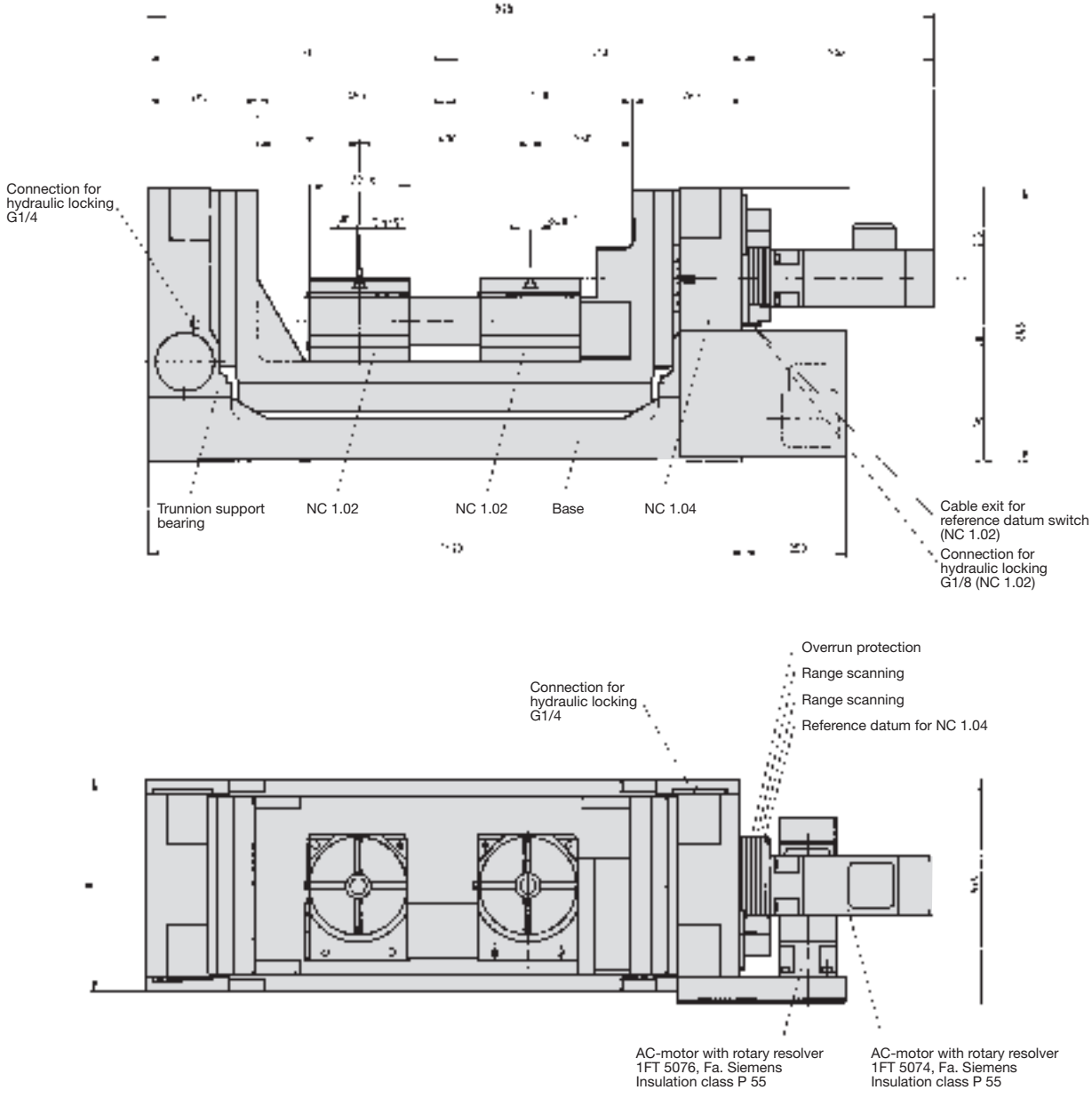

1-11368.2001-1 o

Right of alterations reserved

Accessories

- CNC controls, 1, 2, 3 axes
- Small hydraulic units
- Rapid switching valve blocks
- Tailstocks
- Trunnion Support BEARING
- Sliding tables

1-11389 2001.1 o

Application Requirements

Company _____ Telephone N° _____

Department _____ Telefax _____

Address _____ Inquiry ref. _____

Address _____ e-mail: _____

1. Installation Attitude: horizontal ☐ vertical ☐
(position table top)

2. Dimensional Requirements:

table top ∅	_____	mm	
height to table top face	_____	mm	_____ mm
centre height table top			_____ mm
Alignment groove position ①,②,③	_____		_____

3. Table Loads/Machining Forces:

thrust against table top face	_____	N	_____ N
load: workpieces + fixtures	_____	kg	_____ kg
moment of inertia of above load*	J _____	kgm^2	J _____ kgm^2
tilting moment	_____	Nm	_____ Nm
rotary milling torque	_____	Nm	_____ Nm
tangential moment (hydr. clamping)	_____	Nm	_____ Nm

4. Accuracy Requirements:

positioning accuracy in angular seconds ± _____ _____

5. Hydraulic Table top Clamping with ☐ without ☐

6. Displacement Measuring System

with direct/indirect system fitted ☐

Version prepared for installation of measuring system ☐

Measuring system arrangement _____

_____

7. Motor

Version with motor ☐

Version prepared for installation of motor ☐

motor arrangement _____

8. Supplementary Elements

_____

_____

_____

_____

* Moment of Inertia – Formula:

solid body:

$J = 1/2 \cdot ra^2 \cdot m$

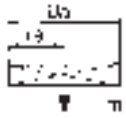

or

$$J = \frac{m \cdot Da^2}{8}$$

Da = diameter (m)

ra = radius of gyration (m)

m = mass (kg)

formula for several loads, placed on same radius of gyration:

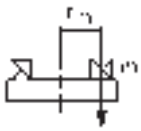

$J \approx 1{,}1 \cdot r_m^2 \cdot m \cdot c$

r_m = radius of gyration (m)

m = mass of each load (kg)

c = number of individual loads

1-11370.2001-1 ◦

Right of alterations reserved

Formulae

Sign used

Meaning	Formula sign	Unit
Angular acceleration	α	s^{-2}
Angle	β	″ (angular seconds)
Turning angle	ρ	° Degrees
Angular velocity	ω	s^{-1}
Positioning time	$T_1 T_2$	s
Acceleration time	$t_a = t_v$	s
Deceleration time	$t_v = t_a$	s
Table top r.p.m.	n	min^{-1}
Moment of inertia	J	kgm^2
Arc length	l_B	mm
Diameter	d	mm

Motion diagram

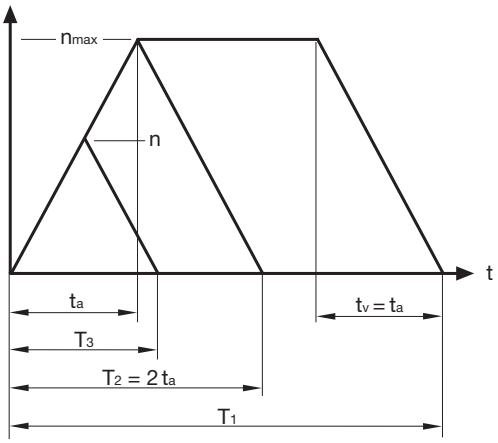

1. Calculation of division time T_1

Theoretical positioning time based on angle of rotation, maximum table r.p.m.and acceleration/ deceleration times.
Max r.p.m. achieved.
It is assumed that the speed of rotation accelerates and decelerates evenly.

With angular acceleration α

1.1 $$T_1 = \frac{\Pi \cdot n}{\alpha \cdot 30} + \frac{\rho}{360°} \cdot \frac{60}{n} \geq 2t_a$$

With acceleration time t_a

1.2 $$T_1 = t_a + \frac{\rho}{360°} \cdot \frac{60}{n} \geq 2t_a$$

If value T_1 is smaller than $2t_a$ then the calculation of T_2 should be carried out using equation 2.1 or 2.2.

Example of calculation

To calculate positioning time T_1 with given angular acceleration α or with given acceleration time t_a.

Given values:

$n = 27{,}5$ [min^{-1}] (from table “Technical Data”)
$\alpha = 14{,}4$ [s^{-2}] (from table “Technical Data”)
$\rho = 90°$
$t_a = 0{,}2$ [s] (Given value from “Technical Data”)
$2t_a = 0{,}4$ [s]

using 1.1 $$T_1 = \frac{\Pi \cdot 27{,}5}{14{,}4 \cdot 30} + \frac{90°}{360°} \cdot \frac{60}{27{,}5} \geq 2t_a$$

or

using 1.2 $$T_1 = 0{,}2 + \frac{90°}{360°} \cdot \frac{60}{27{,}5} \geq 2t_a$$

$T_1 = 0{,}745\ s \geq 0{,}4\ s$

The time for a division 90° is 0,745 s and is greater than 0,4 s ($2t_a$).
⇒ No calculation required for T_2.

1-11371 2001.1 ◦

Right of alterations reserved

2. Calculation of division time T_2

Theoretical positioning time based on angle of rotation, maximum table r.p.m. and acceleration/ deceleration times. Max. r.p.m. not achieved.
It is assumed that the speed of rotation accelerates and decelerates evenly.

With angular acceleration α

2.1 $$T_2 = 2 \cdot \sqrt{\frac{\rho}{57{,}3 \cdot \alpha}} \leq 2t_a$$

With acceleration time t_a

2.2 $$T_2 = 2 \cdot \sqrt{\frac{\rho}{57{,}3 \cdot 2 \cdot \Pi \cdot n} \cdot t_a \cdot 60} \leq 2t_a$$

If value T_2 is smaller than $2t_a$ then the calculation of T_1 should be carried out using equation 1.1 or 1.2.

Example of calculation

To calculate positioning time T_2 with prescribed angular acceleration α or with prescribed acceleration time t_a.

Given values:

$\rho = 3$ [°]
$n = 27{,}5$ [min^{-1}] (from table “Technical Data”)
$\alpha = 14{,}4$ [s^{-2}] (from table “Technical Data”)
$t_a = 0{,}2$ [s] (Given value from “Technical Data”)
$2t_a = 0{,}4$ [s]

using 2.1 $$T_2 = 2 \cdot \sqrt{\frac{3}{57{,}3 \cdot 14{,}4}} \leq 2t_a$$

or

using 2.2 $$T_2 = 2 \cdot \sqrt{\frac{3}{57{,}3 \cdot 2 \cdot \Pi \cdot 27{,}5} \cdot 0{,}2 \cdot 60} \leq 2t_a$$

$T_2 = 0{,}121 \text{ s} \leq 0{,}4 \text{ s}$

The time for a division of 3° is 0,12 s and is less than 0,4 s ($2t_a$).
⇒ No calculation required for T_1.

3. Calculation of angular acceleration α and acceleration time t_a

3.1 $$\alpha = \frac{2 \cdot \Pi \cdot n}{t_a \cdot 60}$$

3.2 $$t_a = \frac{2 \cdot \Pi \cdot n}{\alpha \cdot 60}$$

Calculation examples

For calculation of angular acceleration α or acceleration time t_a.

Given values:

$n = 27{,}5$ [min^{-1}] (from table “Technical Data”)
$t_a = 0{,}2$ [s] (Given value from “Technical Data”)

using 3.1 $$\alpha = \frac{2 \cdot \Pi \cdot 27{,}5}{0{,}2 \cdot 60} = 14{,}399 \text{ s}^{-2}$$

Angular acceleration α is 14,4 s^{-2}

using 3.2 $$t_a = \frac{2 \cdot \Pi \cdot 27{,}5}{14{,}4 \cdot 60} = 0{,}200 \text{ s}$$

Acceleration time t_a is 0,2 s (200 ms)

4. Conversion of angular seconds into arc measurement

4.1 $$l_B = \frac{\beta \cdot d}{412\,530}$$

4.2 $$\beta = \frac{412\,530 \cdot l_B}{d}$$

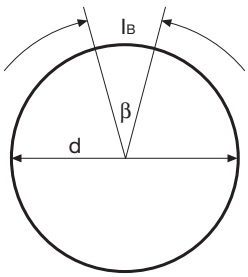

1-11372.2001-1 ◦

Right of alterations reserved

Determination of the moment of inertia

1. Bodies with central axis

1.1

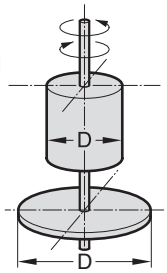

Solid cylinder or flat disc rotating about its own axis.

$$J = \frac{D^2}{8} \times m$$

1.2

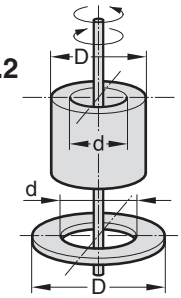

Hollow cylinder or flat ring rotating about its own axis

$$J = \frac{D^2+d^2}{8} \times m$$

1.3

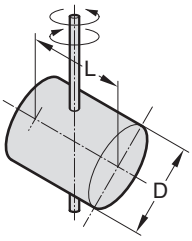

Solid cylinder rotating about an axis perpendicular to its central axis.

$$J = \left(\frac{L^2}{12} + \frac{D^2}{16}\right) \times m$$

1.4

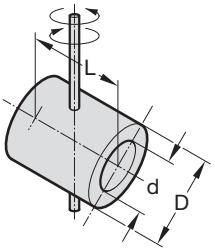

Hollow cylinder rotating about an axis perpendicular to its central axis.

$$J = \left(\frac{L^2}{12} + \frac{D^2+d^2}{16}\right) \times m$$

1.5

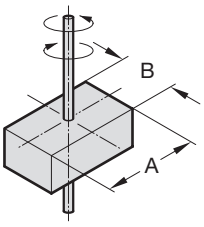

Rectangular plate of any thickness rotating about one central axis.

$$J = \frac{A^2+B^2}{12} \times m$$

1.6

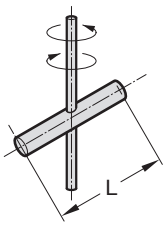

Long thin rod of any cross-section rotating about one central axis

$$J = \frac{L^2}{12} \times m$$

J = Moment of inertia in kgm²
Dimensions in metres, masses in kg

2. Bodies with offset axis

2.1

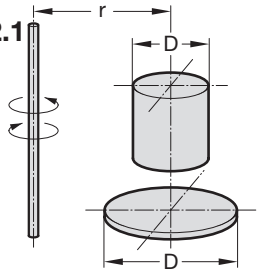

Solid cylinder or flat disc rotating about an external axis.

$$J = \left(\frac{D^2}{8} + r^2\right) \times m$$

2.2

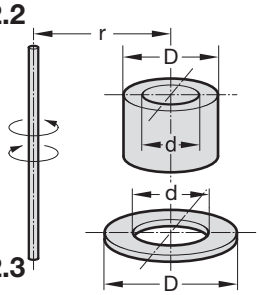

Hollow cylinder or flat ring rotating about an external axis.

$$J = \left(\frac{D^2+d^2}{8} + r^2\right) \times m$$

2.3

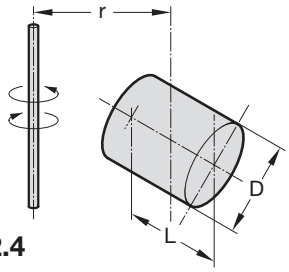

Solid cylinder rotating about an external axis perpendicular to its own central axis.

$$J = \left(\frac{L^2}{12} + \frac{D^2}{16} + r^2\right) \times m$$

2.4

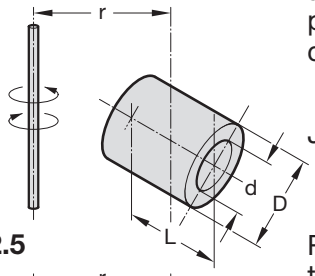

Hollow cylinder rotating about an external axis perpendicular to its own central axis

$$J = \left(\frac{L^2}{12} + \frac{D^2+d^2}{16} + r^2\right) \times m$$

2.5

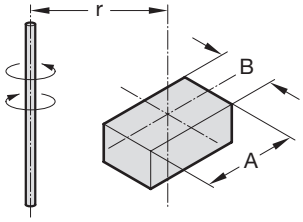

Rectangular plate of any thickness rotating about an external central axis parallel to the axis of symmetry.

$$J = \left(\frac{A^2+B^2}{12} + r^2\right) \times m$$

2.6

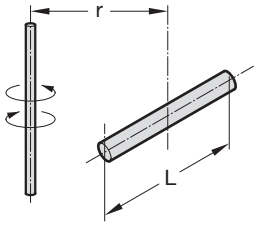

Long thin rod of any cross-section rotating about an external axis perpendicular to its own central axis.

$$J = \left(\frac{L^2}{12} + r^2\right) \times m$$

J = Moment of inertia in kgm²
Dimensions in metres, masses in kg

1-11373 2001.1 ◦

Right of alterations reserved

1-11374-2001-1 o

1-11375.2001-2 o

Right of alterations reserved

Normalien
Standard Parts
Eléments normalisés
стандарты

Rundschalttische
Index Tables
Plateaux diviseurs
поворотные столы

Automation+Robotik
Automation+Robotic
Automatisme+Robotique
техника манипулирования

Vertretungen
Representatives

14000 **Heinrich Siggel GmbH**
Waldstraße 1 · 14163 Berlin
Telefon 030-8029013/14 · Fax 030-8029014

28000 **Walter Ruff GmbH**
Postfach 110266 · 28082 Bremen
Heerenholz 9 · 28307 Bremen
Telefon 0421-481576 · Fax 0421-4387822

31000 **Walter Ruff GmbH**
Berliner Straße 28 · 31174 Schellerten
Telefon 05123-2040 · Fax 05123-2640

33000 **Außendienst Karl-Heinz Keßler**
Mehlstraße 8 · 33729 Bielefeld
Telefon 0521-76443 · Fax 0521-76443
Mob.Tel. 0161-2705594

40000 **Ing. Büro für Automation Manfred Ahke VDI**
Zum Wenzelnberg 2a · 40764 Langenfeld
Telefon 02173-27041-0 · Fax 02173-27041-30

65000 **Außendienst Guido Steinbrück**
Pestalozzistraße 11 · 65307 Bad Schwalbach
Telefon 06124-77422 · Fax 06124-77423
Mob.Tel. 0171-2294514

71000 **Außendienst Ingmar Schimmer**
Beethovenstraße 41 · 71711 Steinheim/Murr
Telefon 07144-890264 · Fax 07144-890263
Mob.Tel. 0161-2705728

72000 **Außendienst Peter Finkenbeiner**
Grüner Weg 2 · 72218 Wildberg
Telefon 07054-8307 · Fax 07054-8307
Mob.Tel. 0170-5643178

80000 **Jugard & Künstner GmbH**
Landsberger Straße 289/I · 80687 München
Telefon 089-5461560 · Fax 089-5802796

90000 **Jugard & Künstner GmbH**
Postfach 900152 · 90492 Nürnberg
Thomas-Mann-Straße 63 · 90471 Nürnberg
Telefon 0911-8608-0* · Fax 0911-860890

07500 **Außendienst Stefan Schumann**
Forstweg 44 · 07570 Weida
Telefon 036603-40802 · Fax 036603-40802
Mob.Tel. 0161-2705745

A **RATH Norm & Bedienteile**
Canongasse 9 · 1180 Wien
Tel. 01-40423 · Fax 01-4042340

AUS **ENMOR TOOL & MACHINE Co. Pty. Ltd.**
7 Cooper Street · Marsfield N.S.W. 2122
Tel. 02-8881372 · Fax 02-8889354

B **BERENDSEN PMC-DOEDIJNS N.V.**
Avenue De Coninck Laan, 2 · 1831 Diegem
Tel. 02-7207154 · Fax 02-7212885

BR **COLOMAN INDUSTRIA E COMERCIO**
de Maquinas e Ferramentas Ltda.
Avenida Pacaembu No. 444 · Caixa Postal, 8664
Barra Funda · Sao Paulo
Tel. 011-66-6775 · Fax 011-826-3094

CH **FIBRO GmbH Zweigniederlassung**
Buechstrasse 10 · 5027 Herznach
Tel. 062-8781880 · Fax 062-8781882

DK **BERENDSEN PMC**
Kokkedal Industripark 12 · 2980 Kokkedal
Tel. 70212121 · Fax 70212122

E **DAUNERT Máquinas-Herramientas S.A.** ·
Tirso de Molina/A. Einstein · Pol. Ind. Almeda
08940 Cornellá (Barcelona)
Tel. 93-4751480 · Fax 93-3776464

F **FIBRO** · 19/21, Rue Jean Lolive · 93170 Bagnolet
Adresse postale: BP no 129 · 93172 Bagnolet Cedex
Tél. 01 43 62 18 80 · Télécopieur 01 48 59 17 47

GB **W. & H. EVES LTD.**
15, Macdonald Street · Birmingham B5 6TF
Tel. 021-622 4561/2 · Fax 021-666 6298

I **LEICA Microsystems S.p.A.**
V. le Ortles 54/A · 20139 Milano
Tel. 02-57401955 · Fax 02-57403273

IND **COMBINED ENGINEERING AGENCIES**
Dr. Ranji Block, First Floor
125. M.G. Road · Secunderabad 500003 A.P.
Tel. 040-844279 · Fax 040-841652

IR **EXIMRAD Co.**
268, Mofatah Ave. · Teheran
Tel. 021-8821203 · Fax 021-839778

J **TOMITA CO. LTD.**
No. 1-18-16, 1-Chome Ohmorinaka,
Ohta-Ku · Tokyo · Tel. 03-37654911 · Fax 03-37678377

MEX **MERCANTIL ZIMA S.A.**
Sanches de la Barquera No. 8 Apart. 19-097
Mexico-19,D.F.
Tel. 05-5636282

N **KASPO MASKIN AS**
Hoeggveien 66 · 7489 Trondheim
Tel. 73969600 · Fax 73969601

NL **Item systems bv**
Zwarte Zee 40–42 · 3144 DE Maassluis
Tel. 010-5937260 · Fax 010-5928538
KvK 30114352 Rotterdam

P **SERI LDA.**
Rua do Sobreiro, 332 · Senhora da Hora ·
Apartado 4103 · 4450 Matosinhos
Tel. 02-9531576 · Fax 02-9539851

ROK **JINSUNG TRADING CORP**
Dong Woo Bld 303 · # 520-2AV Chor Yang
Dong Gu, Pusan
Tel. 051-466-5462/3 · Fax 051-466-5464

S **DANKAB Verktysmaskiner AB**
Box 5025 · 187 05 Täby
Tel. 08-7320290 · Fax 08-7327475

SF **OY CHRISTER LINDHOLM ENG. AB**
Santalantie 25, PL. 63 · 10960 Hanko
Tel. 019-2807200 · Fax 019-2484323

SGP **FIBRO ASIA PTE. LTD.**
121, Genting Lane, 2nd Floor
Singapore 349572
Tel. 065-8463303 · Fax 065-8463302

TR **FIKRET ERDOGAN VE ORT.KOLL.STI.**
Pasmakçi Çayin Cad. No. 9 · 34030 Eyüp-Istanbul
Tel. 212-544 87 53 · Fax 212-567 99 66

USA **FIBRO Inc.**
139 Harrison Avenue, P.O.Box 5924 Rockford, IL 61125
Tel. 815-2291300 · Fax 815-2261765

ZA **Herrmann & Herrmann PTY. LTD.**
24, Shaft Road · P.O.B. 13030 · Knights 1413
Tel. 0118-280100 · Fax 0118-286021

FIBRO GmbH

NORMALIEN
Postfach 1120
D-74851 Hassmersheim
August-Läpple-Weg
D-74855 Hassmersheim
Telefon 06266-73-0*
Telefax 06266-73-237

RUNDSCHALTTISCHE
Postfach 1120
D-74183 Weinsberg
Weidachstrasse 41-43
D-74189 Weinsberg
Telefon 07134-73-0*
Telefax 07134-73-120

AUTOMATION+ROBOTIK
Postfach 1120
D-74851 Hassmersheim
August-Läpple-Weg
D-74855 Hassmersheim
Telefon 06266-73-0*
Telefax 06266-73-213

R · E · 01.2000 ◇

FIBRO GmbH

Standard Parts

Postfach 1120
D-74851 Hassmersheim

August-Läpple-Weg
D-74855 Hassmersheim

Phone ++49 6266-73-0*
Fax ++49 6266-73-139

e-mail: info@fibro.de
http://www.fibro.de /com

Indexing Tables

Postfach 1120
D-74183 Weinsberg

Weidachstrasse 41 – 43
D-74189 Weinsberg

Phone ++49 7134-73-0*
Fax ++49 7134-73-120

e-mail: info@fibro.de
http://www.fibro.de /com

Automation+Robotics

Postfach 1120
D-74851 Hassmersheim

August-Läpple-Weg
D-74855 Hassmersheim

Phone ++49 6266-73-0*
Fax ++49 6266-73-213

e-mail: info@fibro.de
http://www.fibro.de /com

F

FIBRO SARL

BP no 129
93172 Bagnolet Cedex

19/21, rue Jean Lolive
93170 Bagnolet

Téléphone 01 43 62 18 81
Télécopieur 01 48 59 17 47

e-mail: info@fibro.fr
http://www.fibro.fr

USA

FIBRO Inc.

P.O. Box 5924
Rockford, IL 61125

139 Harrison Avenue
Rockford, IL 61104

Phone 815-229 13 00
Fax 815-226 17 65

e-mail: info@fibroinc.com
http://www.fibro.com

SGP

FIBRO ASIA Pte.Ltd.

121 Genting Lane
2nd floor
Singapore 349572

Phone +65-846 33 03
Fax +65-846 33 02

e-mail: fibro@pacific.net.sg
http://www.fibro.com

0-1171-9-5